Documentatie tehnica motoferastrau Ruris 367

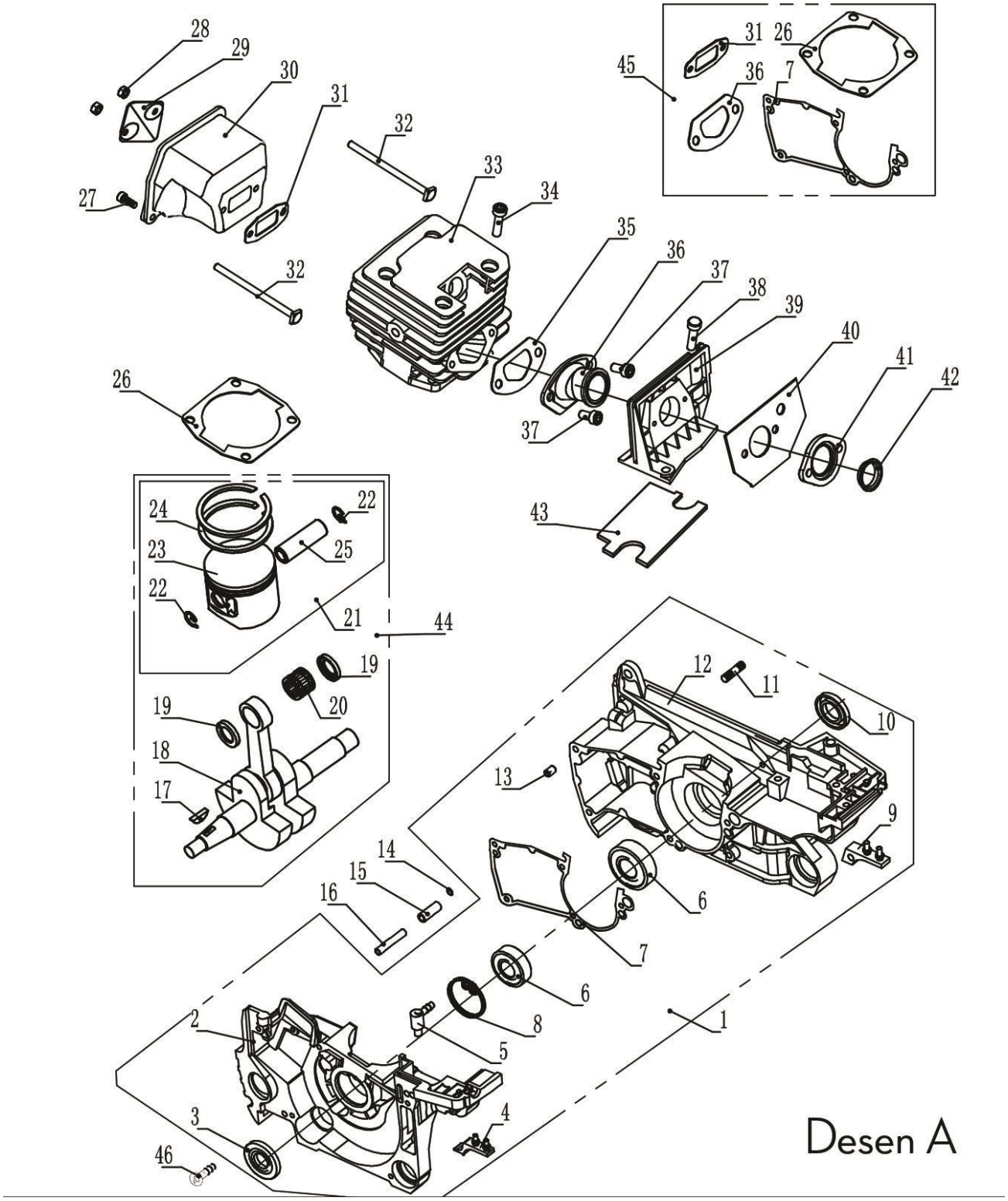

Nr.crt	Denumire	Product name	Cod comanda
A1	Sasiu	crankcase assy	ps367-a1
A2	Semicarter st	left cranksase	ps367-a2
A3	Simering	oil seal	ps367-a3
A4	Limitator st	stopper	ps367-a4
A5	Cot	elbow	ps367-a5
A6	Rulment 6202	bearing 6202	ps367-a6
A7	Garnitura semicarter	crankcase gasket	ps367-a7
A8	Zegher 35	snap ring 35	ps367-a8
A9	Limitator dr	stopper	ps367-a9
A10	Simering	oil seal	ps367-a10
A11	Surub m8x30	screw m8x30	ps367-a11
A12	Semicarter dr	right crankcase	ps367-a12
A13	Bolt 6x9	pin 6x9	ps367-a13
A14	Siguranta	clip	ps367-a14
A15	Protectie	protection	ps367-a15
A16	Supapa	valve	ps367-a16
A17	Pana semiluna	key	ps367-a17
A18	Ambielaj	crankshaft	ps367-a18
A19	Saiba limitator	washer	ps367-a19
A20	Rulment 11x15x12,5	bearing 11x15x12,5	ps367-a20
A21	Kit piston	kit piston	ps367-a21
A22	Siguranta bolt	piston pin clip	ps367-a22
A23	Piston	piston	ps367-a23
A24	Segment	piston ring	ps367-a24
A25	Bolt piston	piston pin	ps367-a25
A26	Garnitura cilindru	cylinder gasket	ps367-a26
A27	Surub m5x10	screw m5x10	ps367-a27
A28	Piulita m5	nut m5	ps367-a28
A29	Spargator flacara	muffler cover	ps367-a29
A30	Toba esapament	muffler	ps367-a30
A31	Garnitura toba	mufflet gasket	ps367-a31
A32	Surub toba m5x87	screw m5x87	ps367-a32
A33	Cilindru	cylinder	ps367-a33
A34	Surub m5x20	screw m5x20	ps367-a34
A35	Garnitura	gasket	ps367-a35
A36	Tub racord	inlet pipe	ps367-a36
A37	Surub m5x10	screw m5x10	ps367-a37
A38	Surub m5x14	screw m5x14	ps367-a38

A39	Placa carburator	carburetor bracket	ps367-a39
A40	Garnitura	gasket	ps367-a40
A41	Flansa	carburetor flange	ps367-a41
A42	Inel	ring	Ps367-a42
A45	set garnituri	gasket set	ps367-a45

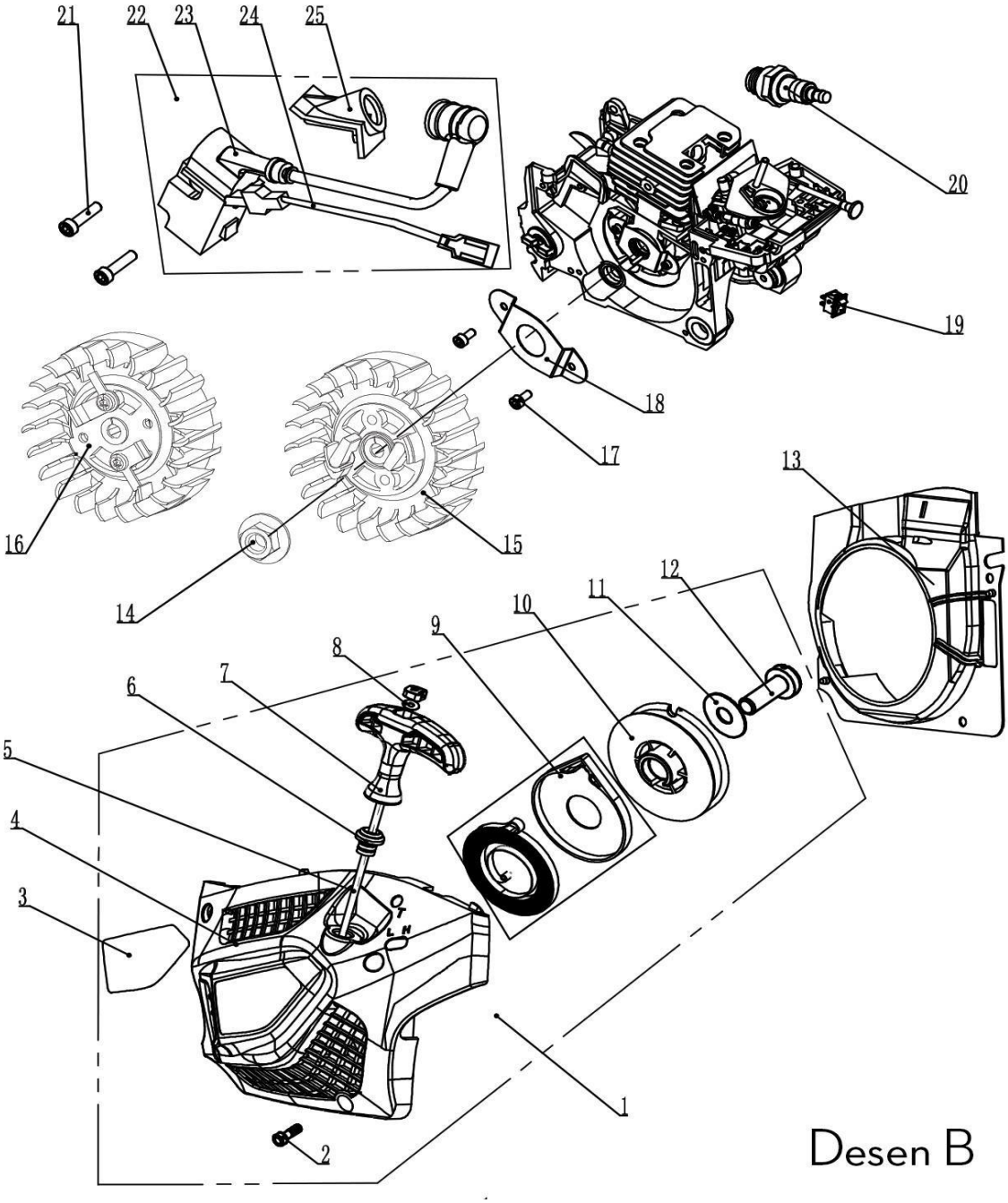

Nr.crt	Denumire produs	Product name	Cod comanda
B1	Ansamblu demaror	starter assy	ps367-b1
B2	Surub m5x14	screw m5x14	ps367-b2
B3	Eticheta	label	ps367-b3
B4	Capac demaror	starter cover	ps367-b4
B5	Sfoara demaror	starter rope	ps367-b5
B6	Bucsa	bush	ps367-b6
B7	Maner demaror	starter grip	ps367-b7
B8	Saiba plata 5	washer 5	ps367-b8
B9	Arc recuperator	recoil spring	ps367-b9
B10	Rola demaror	starter reel	ps367-b10
B11	Saiba 5x16	washer 5x16	ps367-b11
B12	Surub rola	screw	ps367-b12
B13	Deflector	fan cover	ps367-b13
B14	Piulita m8x1	nut m8x1	ps367-b14
B15	Volanta clichet plastic	flywheel	ps367-b15
B16	Volanta clichet metal	flywheel	ps367-b16
B17	Surub m4x8	screw m4x8	ps367-b17
B18	Siguranta simering	oil seal plate	ps367-b18
B19	Intrerupator	switch	ps367-b19
B20	Bujie	spark plug	br2t
B21	Surub m5x20	screw m5x20	ps367-b21
B22	Ans modul aprinder	ignition coil assy	ps367-b22
B23	Modul aprindere	ignition coil	ps367-b23
B24	Cablu	cable	ps367-b24
B25	Protectie	protection	ps367-b25

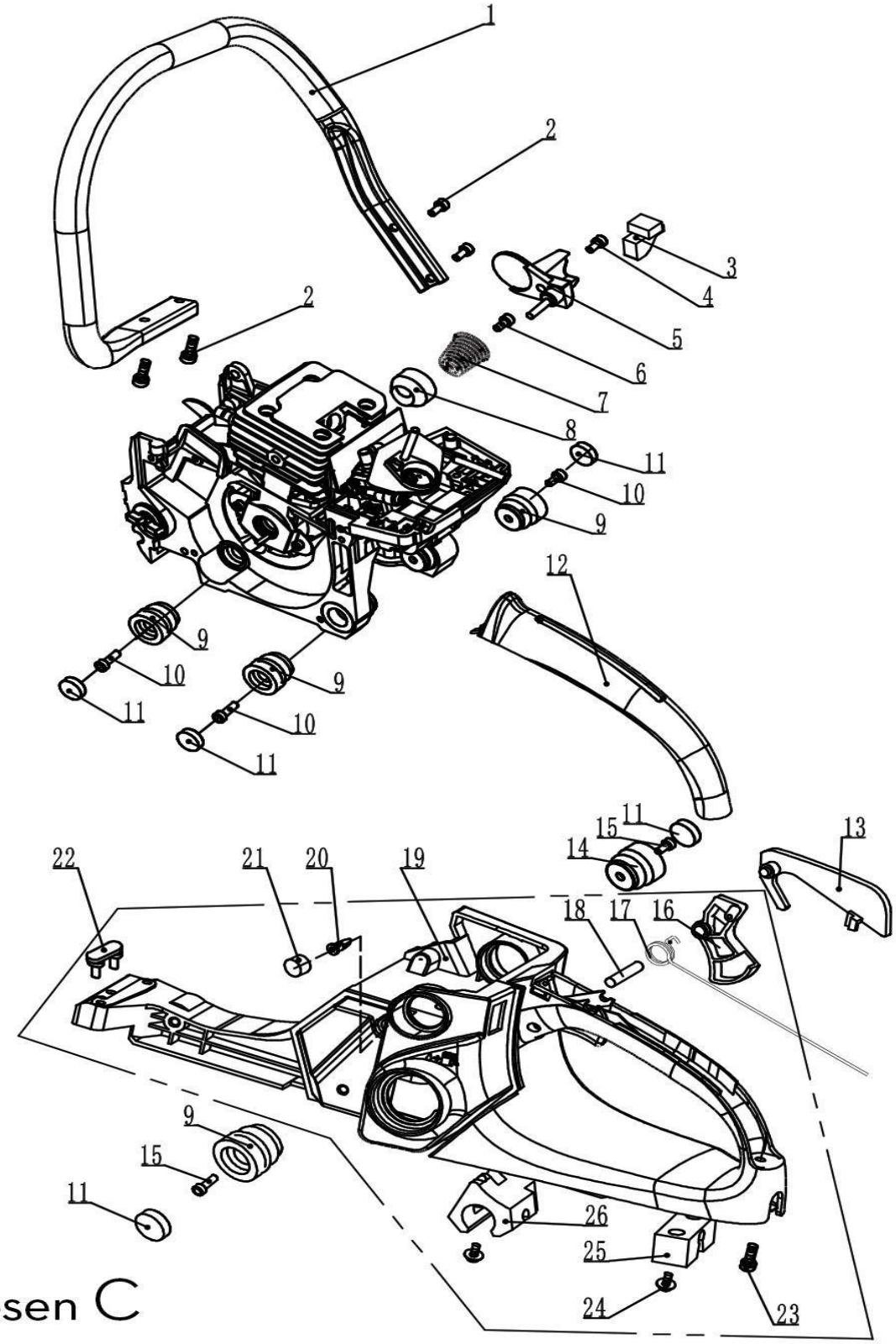
1
2
2
3
4
5
6
7
8
11
10
9
12
9
10
11
9
10
11
11
15
14
13
22
21
20
19
18
17
16
9
15
11
26
25
24
23

Desen C

Nr.crt	Denumire produs	Product name	Cod comanda
C1	Maner frontal	front handle	ps367-c1
C2	Surub	screw	ps367-c2
C3	Amortizor	damper	ps367-c3
C4	Surub m5x14	screw m5x14	ps367-c4
C5	Limitator lant	chain limiter	ps367-c5
C6	Surub	screw	ps367-c6
C7	Arc	spring	ps367-c7
C8	Suport arc	spring support	ps367-c8
C9	Amortizor	damper	ps367-c9
C10	Surub	screw	ps367-c10
C11	Capac	cap	ps367-c11
C12	Capac maner	handle cover	ps367-c12
C13	Blocator acceleratie	throttle interlock arm	ps367-c13
C14	Amortizor	damper	ps367-c14
C15	Surub m5x12	screw m5x12	ps367-c15
C16	Cocos acceleratie	throttle lever	ps367-c16
C17	Arc	spring	ps367-c17
C18	Bolt 6x24	pin 6x24	ps367-c18
C19	Maner rezervor	fuel tank	ps367-c19
C20	Supapa dezaerare	vent valve	ps367-c20
C21	Capac	cover	ps367-c21
C22	Limitator	stopper	ps367-c22
C23	Surub	screw	ps367-c23
C24	Surub	screw	ps367-c24
C25	Clema cheie	key clamp	ps367-c25
C26	Suport cheie	key support	ps367-c26

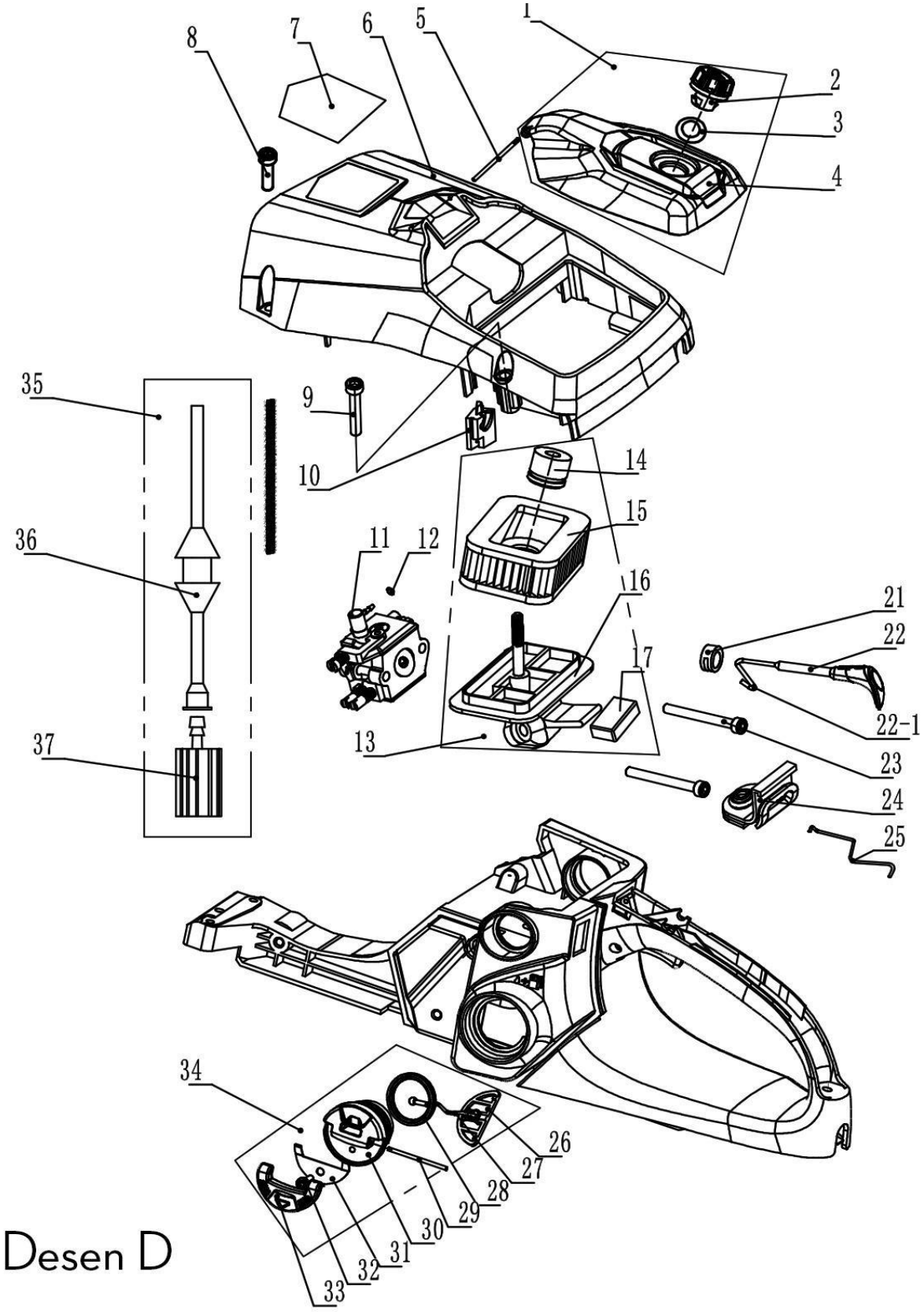
1
2
3
4
5
6
7
8
9
10
11
12
13
14
15
16
17
21
22
22-1
23
24
25
26
27
28
29
30
31
32
33
34
35
36
37

Desen D

Nr.crt	Denumire produs	Product name	Cod comanda
D1	Ansamblu capac filtru aer	air filter cover assy	ps367-d1
D2	Piulita fluture	nut	ps367-d2
D3	Saiba	washer	ps367-d3
D4	Capac filtru aer	air filter cover	ps367-d4
D5	Balama	hinge	ps367-d5
D6	Capota	hood	ps367-d6
D7	Eticheta	label	ps367-d7
D8	Surub m5x14	screw m5x14	ps367-d8
D9	Surub m5x30	screw m5x30	ps367-d9
D10	Protectie	protection	ps367-d10
D11	Carburator walbro	carburetor	ps367-d11
D12	Arc	spring	ps367-d12
D13	Ansamblu filtru	air filter assy	ps367-d13
D14	Piulita filtru aer	nut	ps367-d14
D15	Filtru aer	air filter	ps367-d15
D16	Suport filtru aer	air filter holder	ps367-d16
D17	Limitator	stopper	ps367-d17
D21	Manson fixator	damper	ps367-d21
D22	Levier soc	shock lever	ps367-d22
D23	Surub m5x50	screw m5x50	ps367-d23
D24	Protectie	protection	ps367-d24
D25	Levier acceleratie	throttle lever	ps367-d25
D26	Fluture	cap holder	ps367-d26
D27	Snur	rope	ps367-d27
D28	Garnitura	gasket	ps367-d28
D29	Bolt	pin	ps367-d29
D30	Buson	cap	ps367-d30
D31	Placa elastica	elastic plate	ps367-d31
D32	Surub	screw	ps367-d32
D33	Clapeta	flap	ps367-d33
D34	Ans buson carburant	fuel tank cap assy	ps367-d34
D35	Ans. alimentare	fuel inlet	ps367-d35
D36	Furtun alimentare	fuel pipe	ps367-d36
D37	Filtru combustibil	fuel filter	ps367-d37

CLUTCH TOOLS

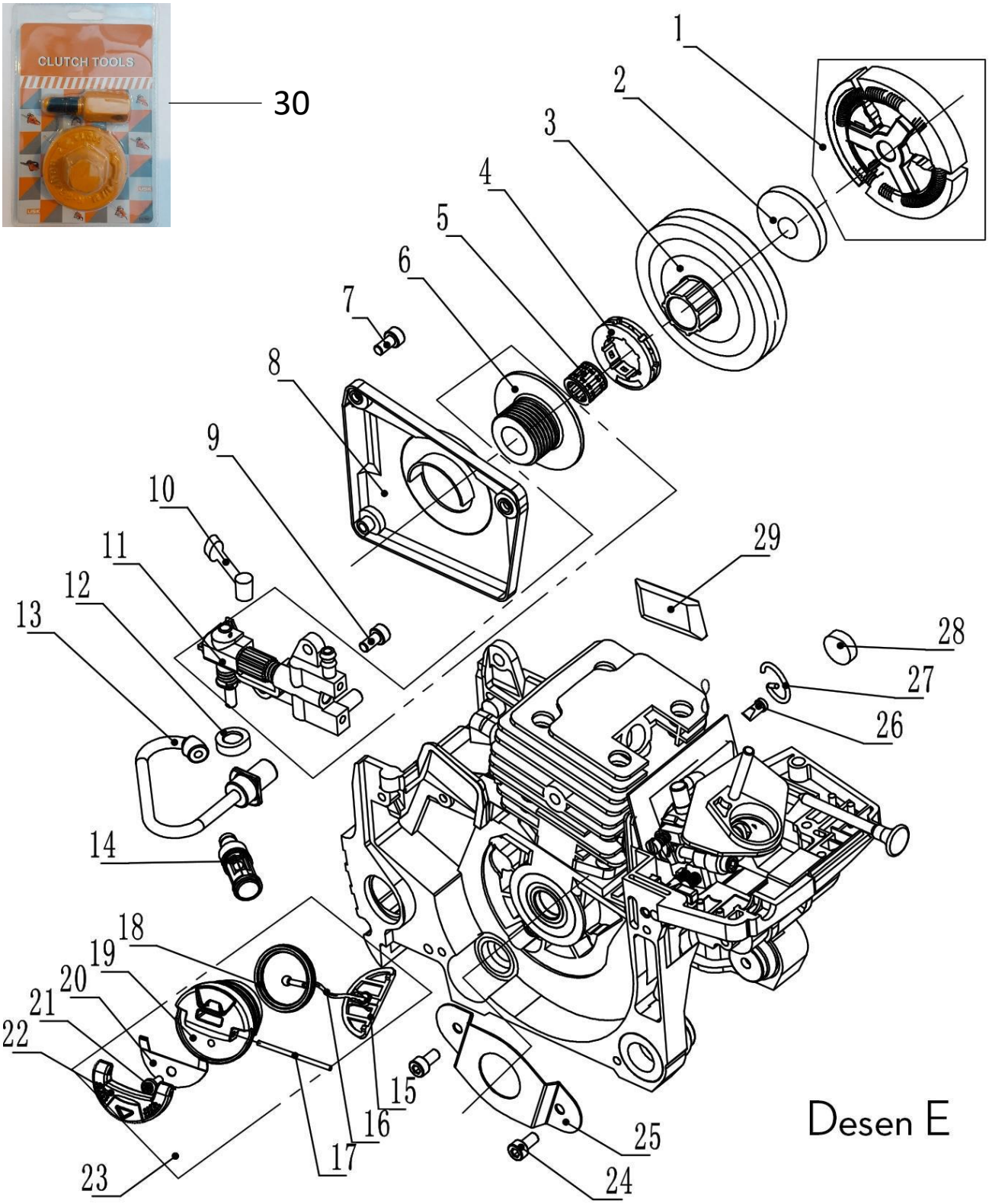
30
1
2
3
4
5
6
7
8
9
10
11
12
13
14
15
16
17
18
19
20
21
22
23
24
25
26
27
28
29
Desen E

Nr.crt	Denumira produs	Product name	Cod comanda
E1	Ansamblu ambreiaj	clutch assy	ps367-e1
E2	Saiba plata	washer	ps367-e2
E3	Carcasa ambreiaj	clutch housing	ps367-e3
E4	Inel roata lant	sproket	ps367-e4
E5	Rulment ambreiaj	needle bearing	ps367-e5
E6	Antrenor	oil pump worm	ps367-e6
E7	Surub M4x10	screw m4x10	ps367-e7
E8	Capac pompa ulei	oil pump cover	ps367-e8
E9	Surub M4x14	screw m4x14	ps367-e9
E10	Furtun refulare ulei	oil pump pipe	ps367-e10
E11	Pompa ulei	oil pump	ps367-e11
E12	Burete	sponge	ps367-e12
E13	Furtun alimentare ulei	oil pump pipe	ps367-e13
E14	Filtru ulei	oil filter	ps455-f22
E15	Fluture	cap holder	ps367-e15
E16	Snur	rope	ps367-e16
E17	Bolt	pin	ps367-e17
E18	Garnitura buson ulei	cap gasket	ps367-e18
E19	Buson ulei	oil tank cap	ps367-e19
E20	Placa elastica	elastic plate	ps367-e20
E21	Surub	screw	ps367-e21
E22	Clapeta	flap	ps367-e22
E23	Ansamblu buson ulei	oil tank cap assy	ps367-e23
E24	Surub	screw	ps367-e24
E25	Protectie	protection	ps367-e25
E26	Supapa	valve	ps367-e26
E27	Siguranta	safety	ps367-e27
E28	Burete	sponge	ps367-e28
E29	Placa ghidaj	guide plate	ps367-e29
E30	Cheie ambreiaj	Clutch tools	ps455-l09

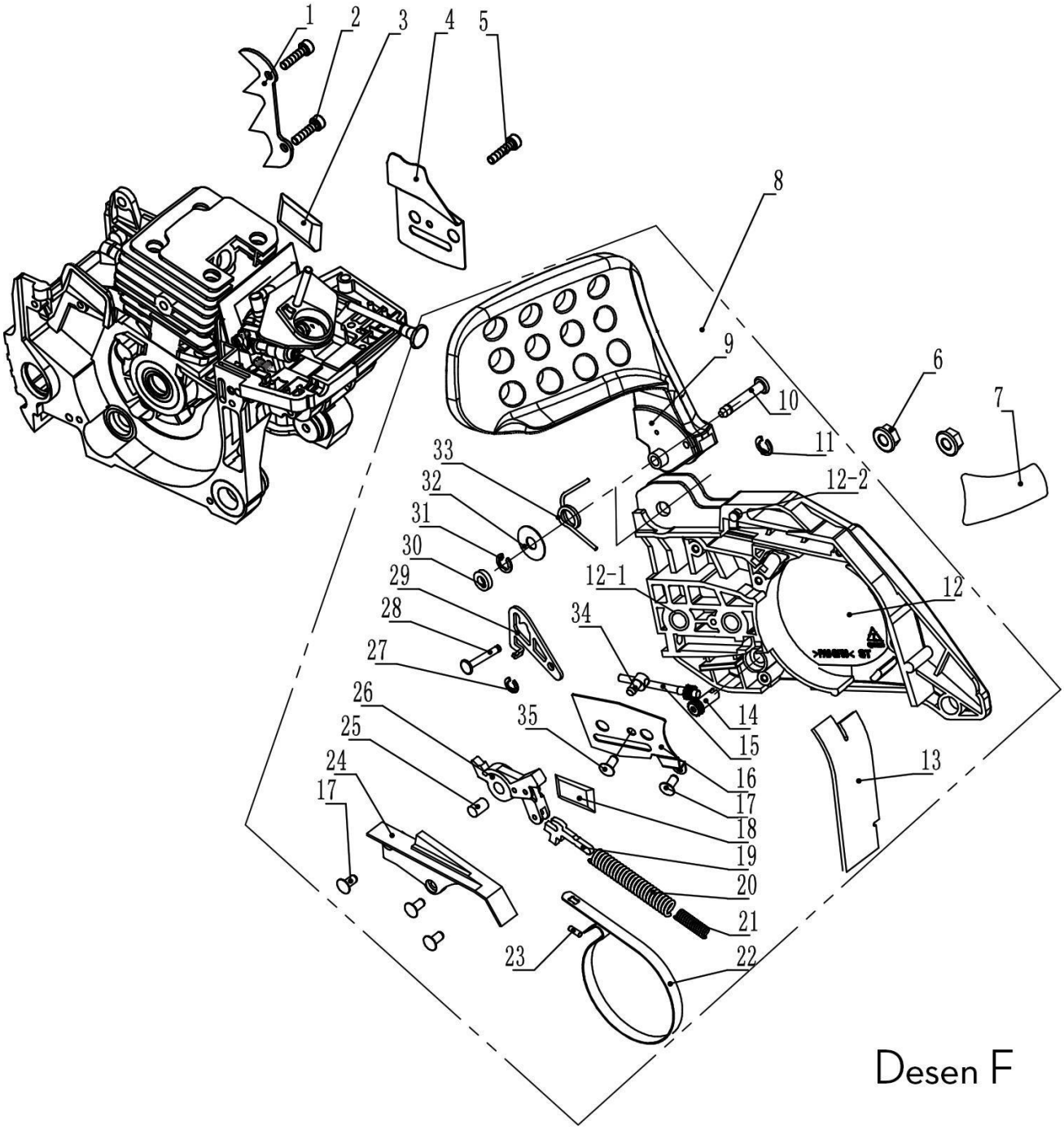
1
2
3
4
5
8
9
10
6
7
11
12-2
33
32
31
30
29
28
27
12-1
12
34
26
25
24
17
35
14
15
16
17
18
19
20
21
22
23
13

Desen F

Nr.crt	Denumire produs	Product name	Cod comanda
F1	Gheara	claw	ps367-f1
F2	Surub m5x10	surub m5x10	ps367-f2
F4	Placa	plate	ps367-f4
F5	Surub m4x8	screw m4x8	ps367-f5
F6	Piulita	nut	ps367-f6
F7	Eticheta	label	ps367-f7
F8	Capac asamblat	cover assy	ps367-f8
F9	Maner actionare frana	handle brake	ps367-f9
F10	Bolt	pin	ps367-f10
F11	Siguranta	snap ring	ps367-f11
F12	Capac roata lant	chain wheel cover	ps367-f12
F13	Sort	sawdust protector	ps367-f13
F14	Roata intinzator	chain adjusting sprocket	ps367-f14
F15	Surub intinzator	screw chain adjusting	ps367-f15
F16	Placa	plate	ps367-f16
F17	Surub	screw	ps367-f17
F18	Placa ghidaj	guide plate	ps367-f18
F19	Levier frana	brake arm	ps367-f19
F20	Arc frana	brake spring	ps367-f20
F21	Ghidaj	guide	ps367-f21
F22	Banda franare	brake band	ps367-f22
F23	Bolt 3x9	pin 3x9	ps367-f23
F24	Capac	cover	ps367-f24
F25	Bolt	pin	ps367-f25
F26	Articulatie	brake lever	ps367-f26
F27	Siguranta	snap ring	ps367-f27
F28	Bolt	pin	ps367-f28
F29	Placa	plate	ps367-f29
F30	Distantier	spacer	ps367-f30
F31	Siguranta	snap ring	ps367-f31
F32	Saiba	washer	ps367-f32
F33	Arc	spring	ps367-f33
F34	Piulita intinzator	nut chain adjusting	ps367-f34
F35	Surub	screw	ps367-f35