Producător motoutilaje

Documentatie tehnică

Documentatie motocoasa Ruris 431

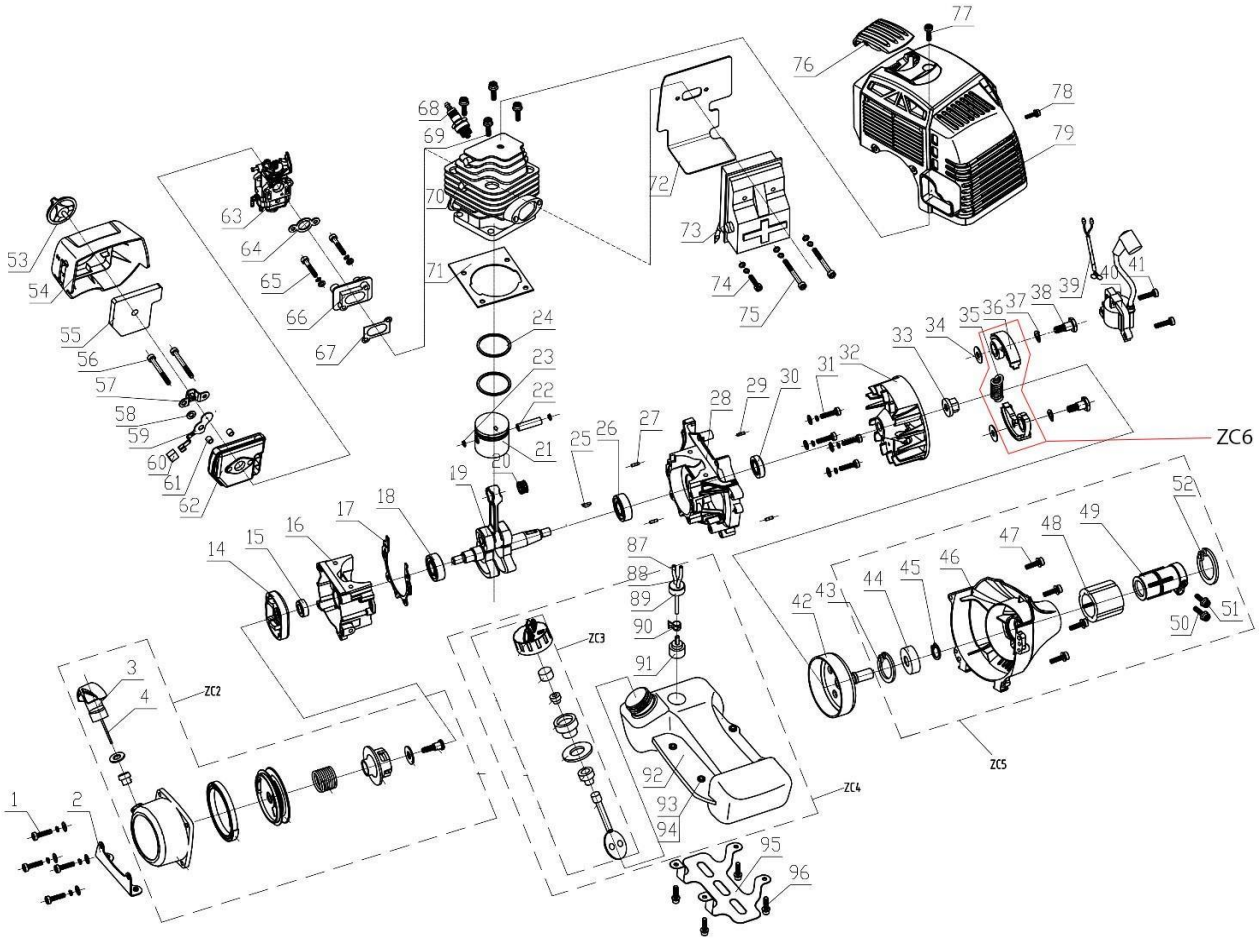

Nr. crt	Denumire produs	Product name	Cod intern RURIS431
1	surub	screw	ps441-2-01
2	brida	plate	ps441-2-02
3	maner	handle	ps409s-2-02
4	sfoara	starter rope	ps409s-2-86
14	cuplaj demaror	coupling	ps441-2-14
15	simering	seal	ps441-2-15
16	semicarter	crank case	ps431-2-16

Craiova, ROMÂNIA

17	garnitura semicarter	crankcase gasket	ps441-2-17
18	rulment	bearing	ps441-2-18
19	ambielaj	crankshaft	ps441-2-19
20	rulment ace	needle bearing	ps441-2-20
21	piston	piston	ps431-2-21
22	bolt piston	piston pin	ps431-2-22
23	siguranta bolt	piston pin clip	ps431-2-23
24	segment	piston ring	ps431-2-24
25	pana semiluna	key	ps441-2-25
26	rulment	bearing	ps441-2-26
27	stift centrare	pin	ps441-2-27
28	semicarter	crank case	ps431-2-28
29	stift centrare	pin	ps441-2-29
30	simering	seal	ps441-2-30
31	surub	screw	ps441-2-31
32	volanta	flywheel	ps441-2-32
33	piulita	nut	ps441-2-33
34	saiba plata	washer	ps441-2-34
35	arc ambreiaj	spring clutch	ps441-2-35
36	contragreutate	brake block	ps441-2-36
37	saiba elastica	spring washer	ps441-2-37
38	surub ambreiaj	screw	ps441-2-38
39	caburi electrice	cable	ps441-2-39
40	bobina aprindere	ignition coil	ps441-2-40
41	surub	screw	ps441-2-41
42	oala ambreiaj	clutch cup	ps441-2-42
43	zegher	zegher	ps441-2-43
44	rulment	bearing	ps441-2-44
45	zegher	zegher	ps441-2-45
46	cuplaj transmisie	coupling	ps431-2-46
47	surub	screw	ps441-2-47
48	amortizor	damper	ps441-2-48
49	bucsa	bush	ps441-2-49
50	surub	screw	ps441-2-50
51	surub	screw	ps441-2-51
52	zegher	zegher	ps441-2-52
53	surub capac filtru	screw	ps441-2-53
54	capac filtru aer	air filter cover	ps441-2-54
55	filtru aer	air filter	ps441-2-55
56	surub	screw	ps441-2-56

57	brida	plate	ps441-2-57
58	saiba	washer	ps441-2-58
59	clapeta soc	clap shock	ps441-2-59
60	manson clapeta	sleeve	ps441-2-60
61	distantier	spacer	ps441-2-61
62	suport filtru aer	air filter holder	ps441-2-62
63	carburator	carburetor	ps441-2-63
64	garnitura	gasket	ps441-2-64
65	surub	screw	ps441-2-65
66	izolator	insulator	ps441-2-66
67	garnitura	gasket	ps441-2-67
68	bujie	spark plug	br2t
69	surub cilindru	screw	ps441-2-69
70	cilindru	cylinder	ps431-2-70
71	garnitura cilindru	cylinder gasket	ps441-2-71
72	garnitura toba	muffler gasket	ps441-2-72
73	toba esapament	muffler	ps441-2-73
74	surub	screw	ps441-2-74
75	surub	screw	ps441-2-75
76	protectie fisa	protection	ps441-2-76
77	surub	screw	ps441-2-77
78	surub	screw	ps441-2-78
79	capota	hood	ps431-2-79
87	furtun retur	retur pipe	ps441-2-87
88	furtun alimentare	fuel pipe	ps441-2-88
89	garnitura etansare	Sealing gasket	ps441-2-89
90	colier	clip	ps441-2-90
91	filtru carburant	fuel filter ass'y	ps409s-2-75
92	rezervor	fuel tank	ps431-2-92
95	protectie rezervor	fuel tank protection	ps431-2-95
96	surub	screw	ps441-2-96
ZC2	demaror	starter	ps441-2-zc2
ZC3	ansamblu buson	cover fuel tank	ps441-2-zc3
ZC4	ansamblu rezervor	fuel tank assy.	ps431-2-zc4
ZC5	ansamblu cuplaj	coupling assy.	ps431-2-zc5
ZC6	ansamblu ambreiaj	clutch assy.	ps320-2-zc6

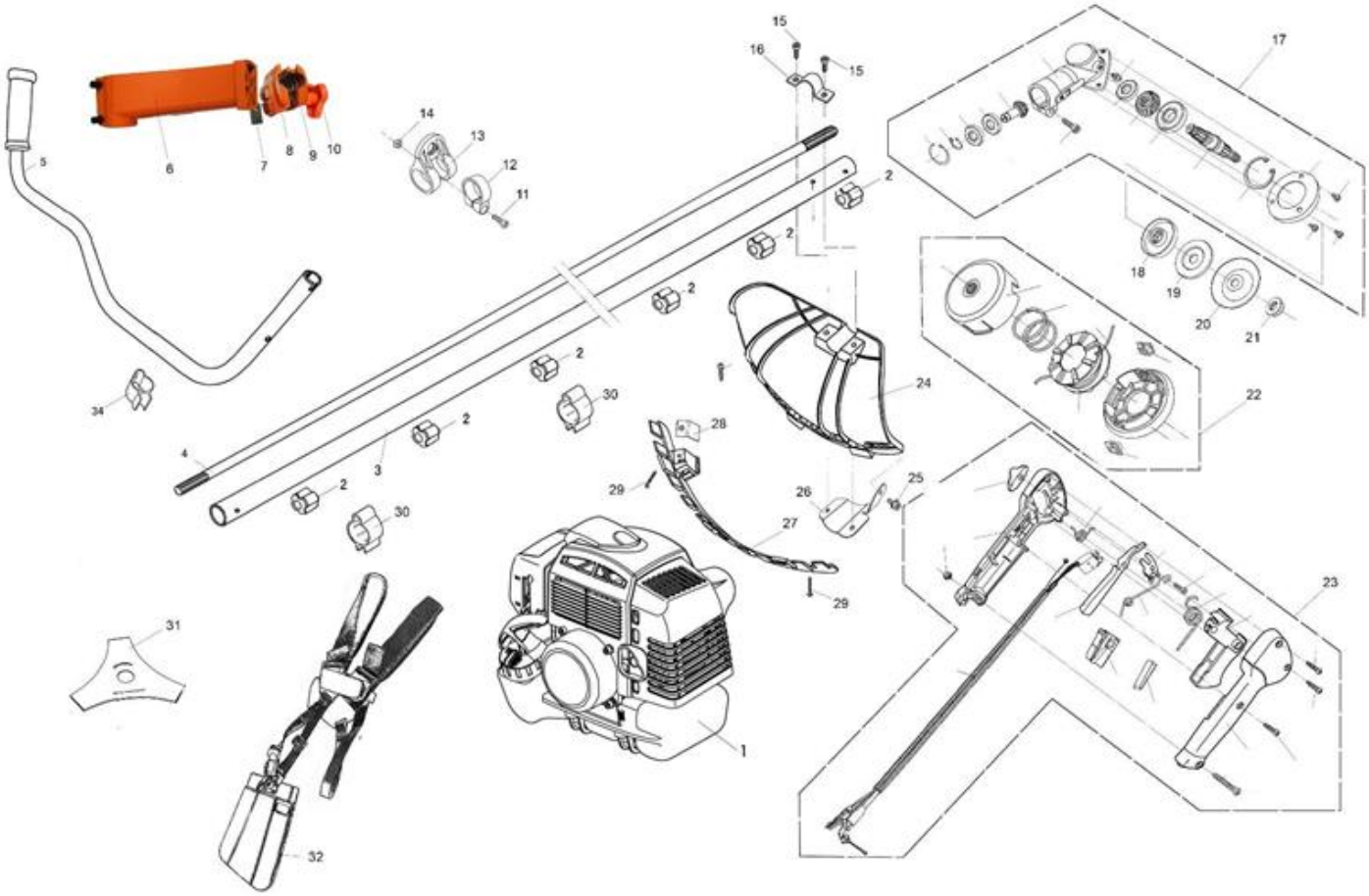

Nr. crt	Denumire produs	Product name	Cod intern Ruris 431
1	motor	engine	ps431-1-01
2	bucsa ghidare	bush	ps441-1-02
3	tija	rod	ps441-1-03
4	arbore	axle	ps441-1-04
5	coarne	handle	ps441-1-05
6	suport coarne	support handle	ps441-1-06

7	piulita speciala	nut	ps441-1-07
8	brida inferioara	plate	ps441-1-08
9	brida superioara	plate	ps441-1-09
10	surub rozeta	screw	ps441-1-10
11	surub	screw	ps441-1-11
12	colier	clip	ps441-1-12
13	prindere chinga	clamp	ps441-1-13
14	piulita	nut	ps441-1-14
15	surub	screw	ps441-1-15
16	brida	plate	ps441-1-16
17	cap reductor	reduction gear	ps441-1-17
18	blocator	lock	ps441-1-18
19	saiba speciala	washer	ps441-1-19
20	oala protectie	protection cup	ps441-1-20
21	piulita	nut	ps441-1-21
22	auto-cut	auto-cut	psase55-1-50
23	ans miner+cablu acc	throttle assembly	ps441-1-23
23a	intrerupator + cablu acceleratie	throttle assembly	ps441-1-23a
24	aparatoare	shields	ps441-1-24
25	surub	screw	ps441-1-25
26	brida stabilizatoare	plate	ps441-1-26
27	sort protectie	protection apron	ps441-1-27
28	limitator sarcina	cutter	ps441-1-28
29	surub	screw	ps441-1-29
30	brida cablu	plate	ps441 -1-30
31	cutit 3 taisuri	knife	ps309-1-40
31A	cutit 4 taisuri	knife	ps400-1-40
31B	disc 80 dinti	disk	ps401c-1-40a
32	ham	harness	ps441-1-32