Documentaţie tehnică motocositoare DAC 777K şi CLD-SW01

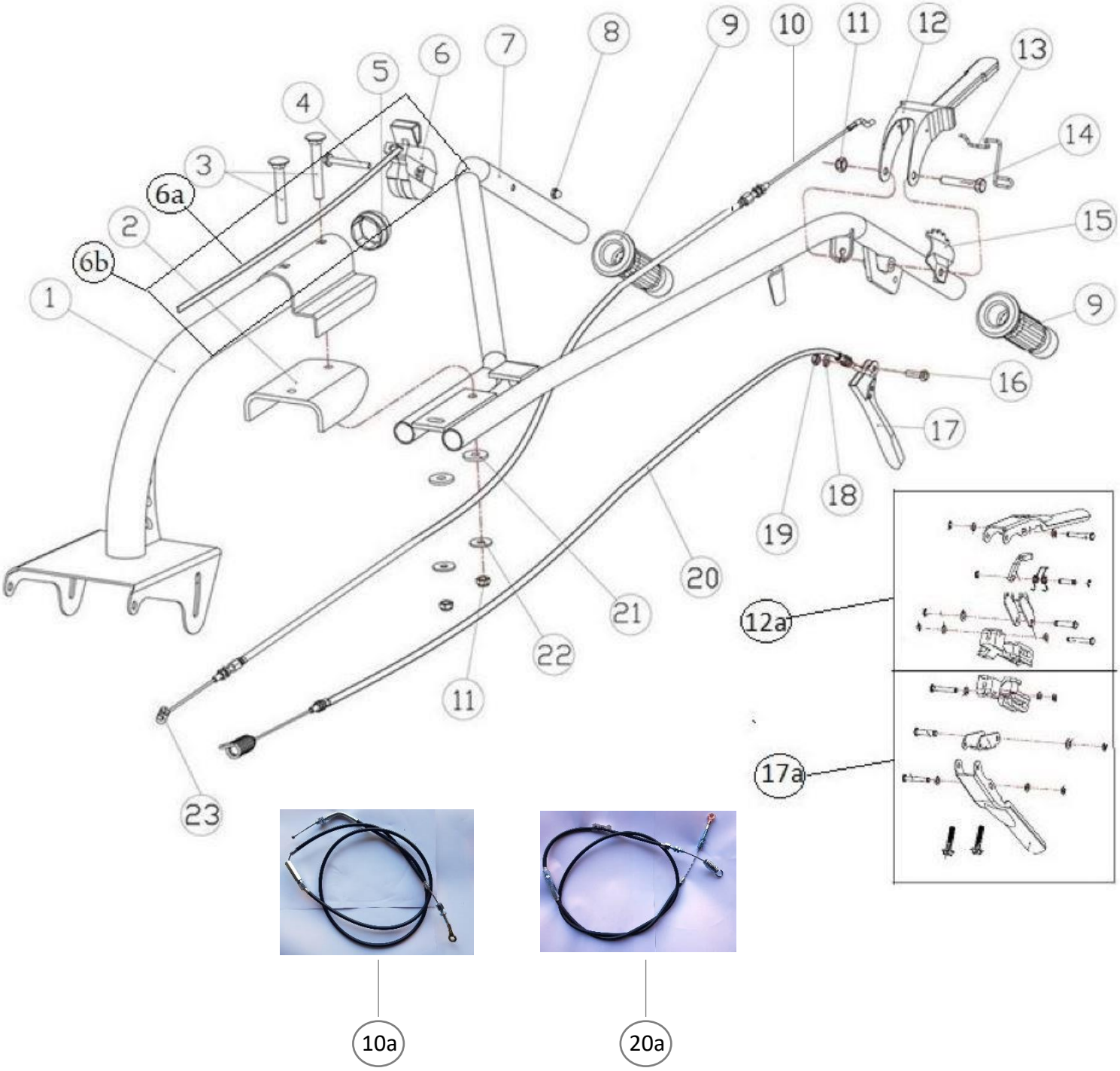

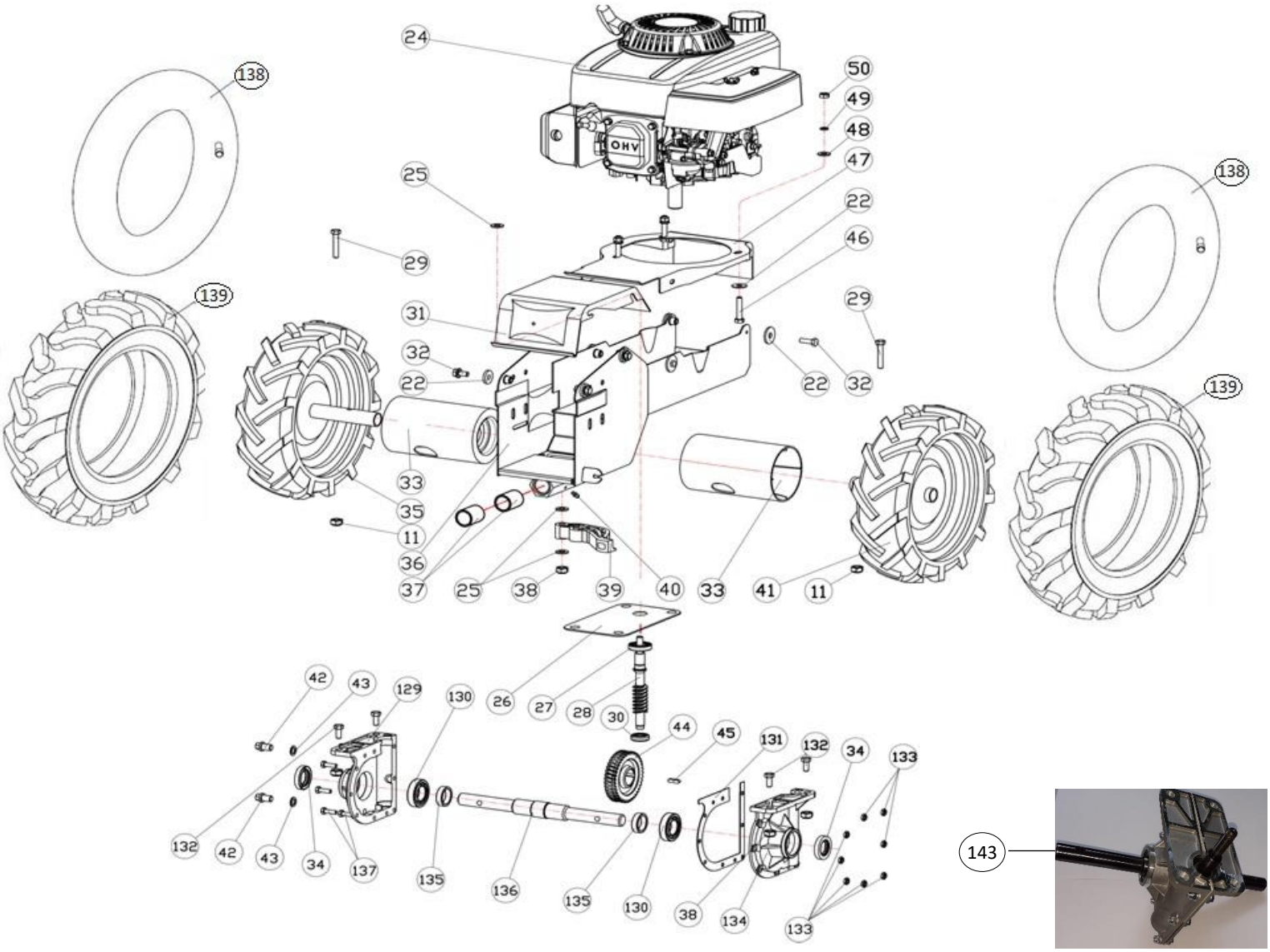
24
138
50
49
48
47
25
22
46
29
139
31
32
22
22
32
29
33
35
11
36
37
25
38
39
40
33
41
11
42
43
129
130
26
27
28
30
44
45
131
132
34
133
132
42
43
34
137
135
136
135
130
38
134
133

143

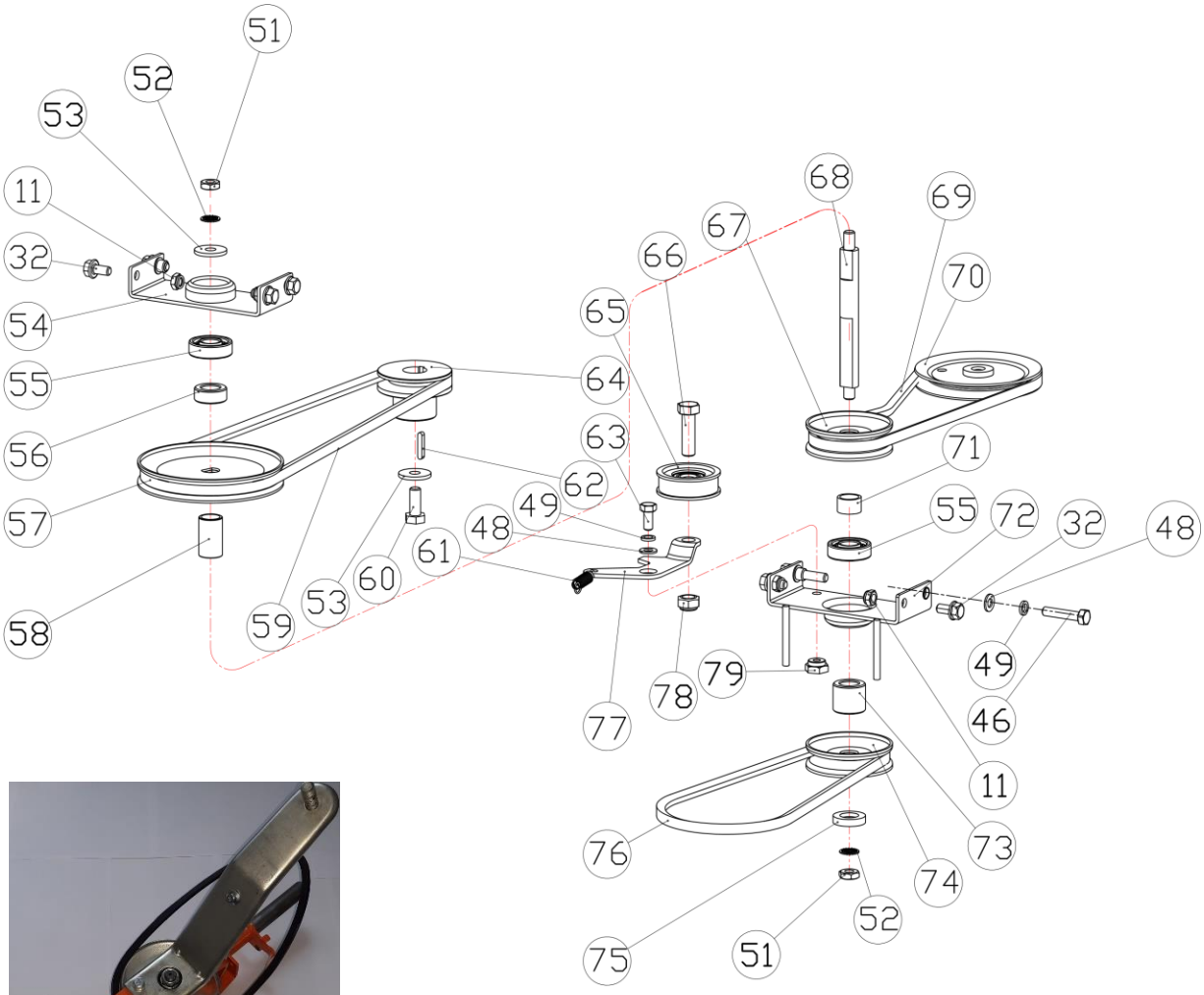
51
52
53
11
32
54
55
56
57
58
59
53
60
61
48
49
62
63
64
65
66
67
68
69
70
71
55
72
32
48
49
46
11
73
74
52
51
75
76
77
78
79

141

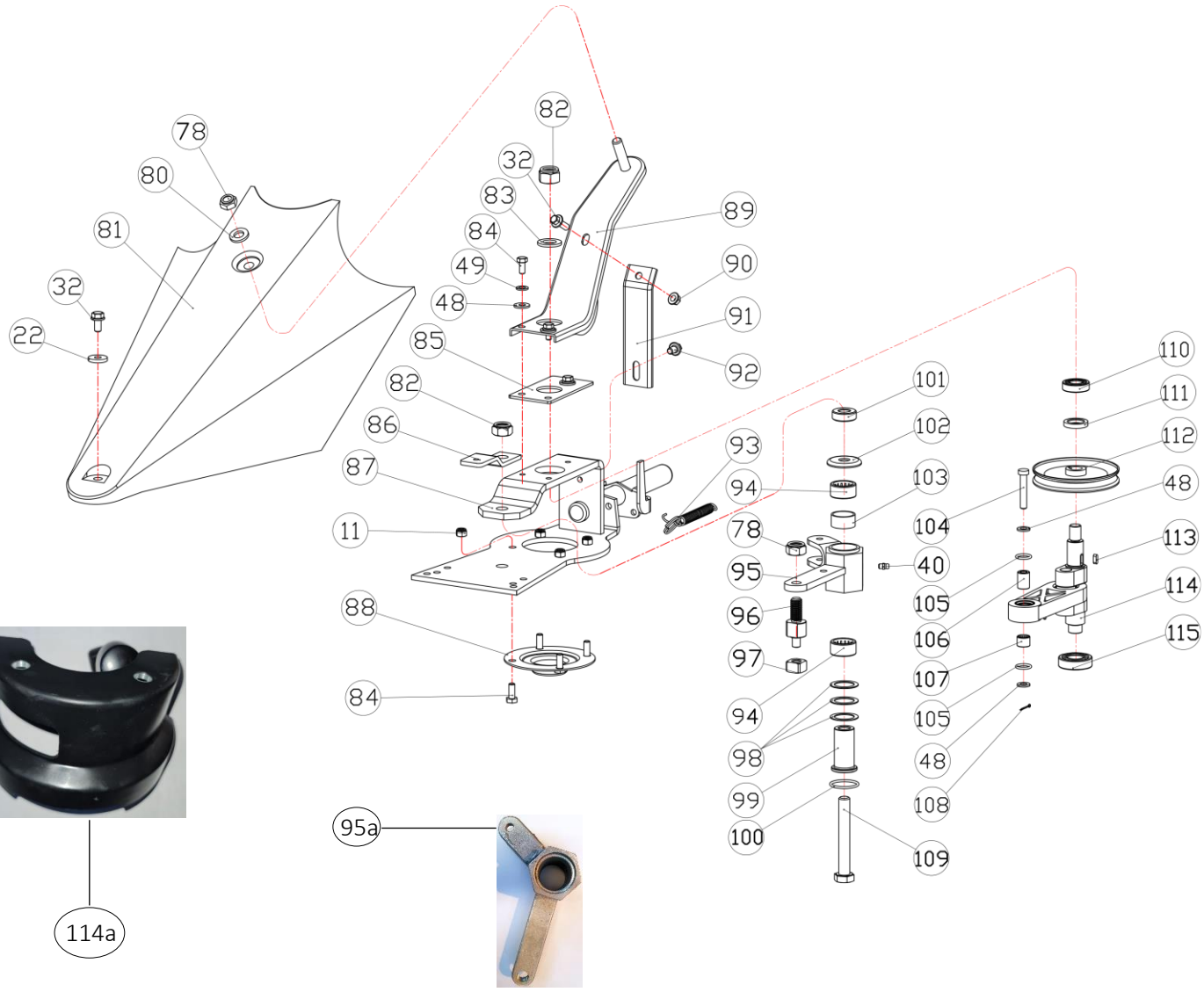
78
80
81
32
22
82
32
83
84
49
48
85
82
86
87
11
88
84
89
90
91
92
93
94
78
95
96
97
94
98
99
100
101
102
103
104
40
105
106
107
105
48
108
109
110
111
112
48
113
114
115
95a
114a

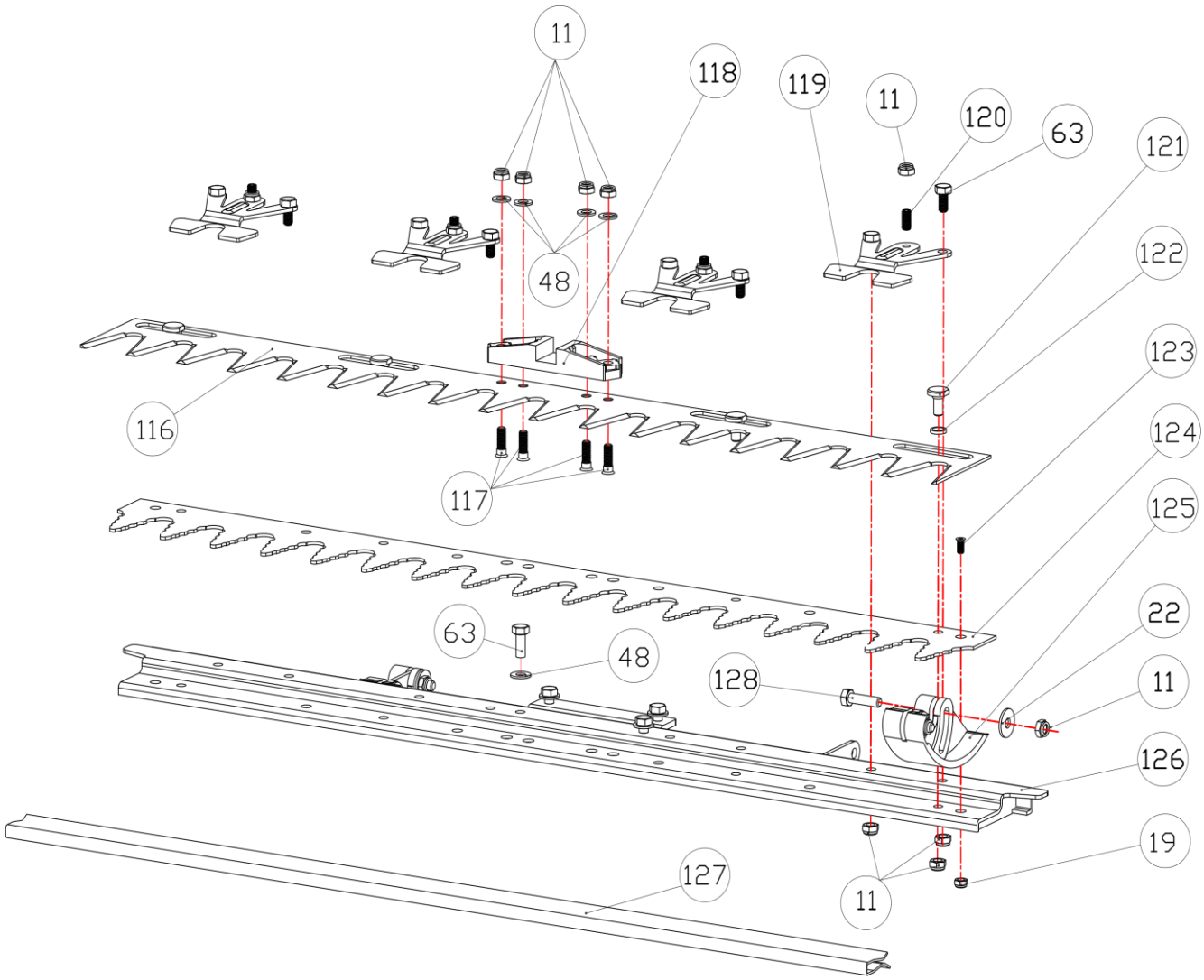
11
118
119
11
120
63
121
122
123
124
125
22
11
126
19
11
48
116
117
63
48
128
127

116a

142

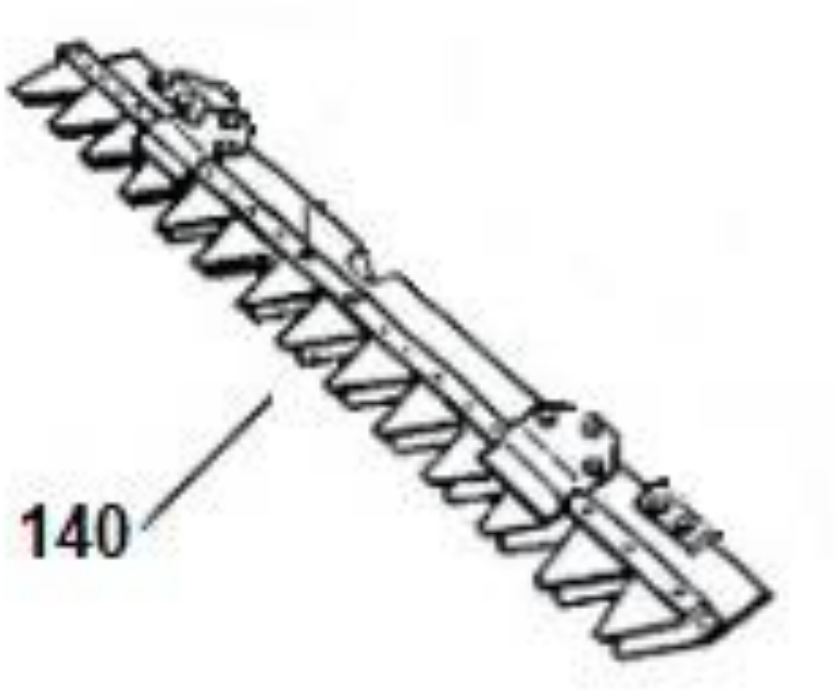

Nr. crt	Denumire produs	Cod comanda
1	suport coarne	ps777k-1
2	placa amortizor	ps777k-2
3	surub m8x70	ps777k-3
4	surub m6x50	ps777k-4
5	ornament	ps777k-5
6	maneta acceleratie	ps777k-6
6a	cablu acceleratie	ps777k-6a
6b	ansamblu maneta acceleratie	ps777k-6b
7	coarne	ps777k-7
8	piulita m6	ps777k-8
9	manson	ps777k-9
10	cablu actionare masa	ps777k-10

10a	cablu actionare masa 2019	ps777k-10a
11	piulita m8	ps777k-11
12	maneta cuplare masa	ps777k-12
12a	maneta cuplare masa 2019	ps777k-12a
13	siguranta maneta	ps777k-13
14	surub m8x45	ps777k-14
15	placa limitare	ps777k-15
16	surub m6x20	ps777k-16
17	maneta cuplare roti	ps777k-17
17a	maneta cuplare roti 2019	ps777k-17a
18	saiba 6	ps777k-18
19	piulita 6	ps777k-19
20	cablu cuplare roti	ps777k-20
20a	cablu cuplare roti 2019	ps777k-20a
21	saiba cauciuc	ps777k-21
22	saiba 8	ps777k-22
23	bucla	ps777k-23
24	motor 777k	ps777k-24
25	saiba 8	ps777k-25
26	flansa	ps777k-26
27	rulment 6302-2z	ps777k-27
28	ax melcat	ps777k-28
29	surub m8x32	ps777k-29
30	lagar	ps777k-30
31	capac frontal	ps777k-31
32	surub m8x20	ps777k-32
33	protectie ax roti	ps777k-33
34	simering 20x40x7	ps777k-34
35	ansamblu roata dr	ps777k-35
36	carcasa	ps777k-36
37	bucsa	ps777k-37
38	piulita m10	ps777k-38
39	maneta actionare	ps777k-39
40	surub gresare	ps777k-40
41	ansamblu roata st	ps777k-41
42	dop ulei	ps777k-42
43	saiba etansare	ps777k-43
44	roata melcata	ps777k-44
45	pana	ps777k-45
46	surub m8x40	ps777k-46

47	suport motor	ps777k-47
48	saiba 8	ps777k-48
49	grower 8	ps777k-49
50	piulita m8	ps777k-50
51	piulita m10	ps777k-51
52	grower 10	ps777k-52
53	saiba 10	ps777k-53
54	placa fixare rulment	ps777k-54
55	rulment 6203-rs	ps777k-55
56	distantier	ps777k-56
57	roata curea	ps777k-57
58	distantier	ps777k-58
59	curea transmisie	ps777k-59
60	surub 5/16unf24	ps777k-60
61	arc	ps777k-61
62	pana 4.7x4.7x25	ps777k-62
63	surub m8x20	ps777k-63
64	pinion curea	ps777k-64
65	rola intinzator	ps777k-65
66	surub m12x40	ps777k-66
67	fulie transmisie	ps777k-67
68	ax transmisie	ps777k-68
69	curea transmisie roti	ps777k-69
70	ansamblu fulie	ps777k-70
71	bucsa distantier	ps777k-71
72	suport	ps777k-72
73	distantier inferior	ps777k-73
74	ansamblu fulie	ps777k-74
75	bucsa fulie	ps777k-75
76	curea transmisie masa	ps777k-76
77	brat intinzator	ps777k-77
78	piulita autoblocanta	ps777k-78
79	piulita	ps777k-79
80	saiba m12	ps777k-80
81	carena	ps777k-81
82	piulita autoblocanta m14	ps777k-82
83	saiba14	ps777k-83
84	surub	ps777k-84
85	placa protectie	ps777k-85
86	brida	ps777k-86

87	ansamblu suport	ps777k-87
88	capac lagar	ps777k-88
89	suport aparatoare	ps777k-89
90	piulita m8	ps777k-90
91	intaritura	ps777k-91
92	surub m8x12	ps777k-92
93	arc revenire	ps777k-93
94	rulment hk2516	ps777k-94
95	brat actionare masa	ps777k-95
95a	brat actionare masa scurt (2017)	ps777k-95a
96	surub special	ps777k-96
97	bucsa actionare	ps777k-97
98	saiba	ps777k-98
99	ax brat	ps777k-99
100	oring 31.5x2.65	ps777k-100
101	bucsa distantier	ps777k-101
102	garnitura protectie	ps777k-102
103	inel blocare	ps777k-103
104	bolt biela 8×45	ps777k-104
105	oring 15x2.65	ps777k-105
106	bucsa	ps777k-106
107	rulment hk1516	ps777k-107
108	siguranta 3.2×30	ps777k-108
109	surub m14x100	ps777k-109
110	rulment 61904-2z	ps777k-110
111	bucsa	ps777k-111
112	ansamblu fulie curea	ps777k-112
113	pana 5x15	ps777k-113
114	ansamblu arbore+biela	ps777k-114
114a	aparatoare	ps777k-114a
115	rulment 6203-2z	ps777k-115
116	lama mobila	ps777k-116
116a	lama mobila 2017	ps777k-116a
117	surub	ps777k-117
118	placa antrenare	ps777k-118
119	capac ghidaj	ps777k-119
120	surub m8x16	ps777k-120
121	surub fixare	ps777k-121
122	saiba glisare	ps777k-122
123	surub	ps777k-123

124	lama fixa	ps777k-124
125	patina	ps777k-125
126	suport lama fixa	ps777k-126
127	protectie cutite	ps777k-127
128	surub m8x30	ps777k-128
129	semicarcasa reductor dr	ps777k-129
130	rulment 6005-2z	ps777k-130
131	garnitura	ps777k-131
132	surub m10X25	ps777k-132
133	piulita m6	ps777k-133
134	semicarcasa reductor st	ps777k-134
135	blocator	ps777k-135
136	ax transmisie	ps777k-136
137	surub m6x20	ps777k-137
138	camera	ps777k-138
139	anvelopa	ps777k-139
140	lama completa	ps777k-140
141	transmisii complete	ps777k-141
142	spargator	ps777k-142
143	ansamblu reductor	ps777k-143