Documentatie tehnica freza de zapada Everest 603

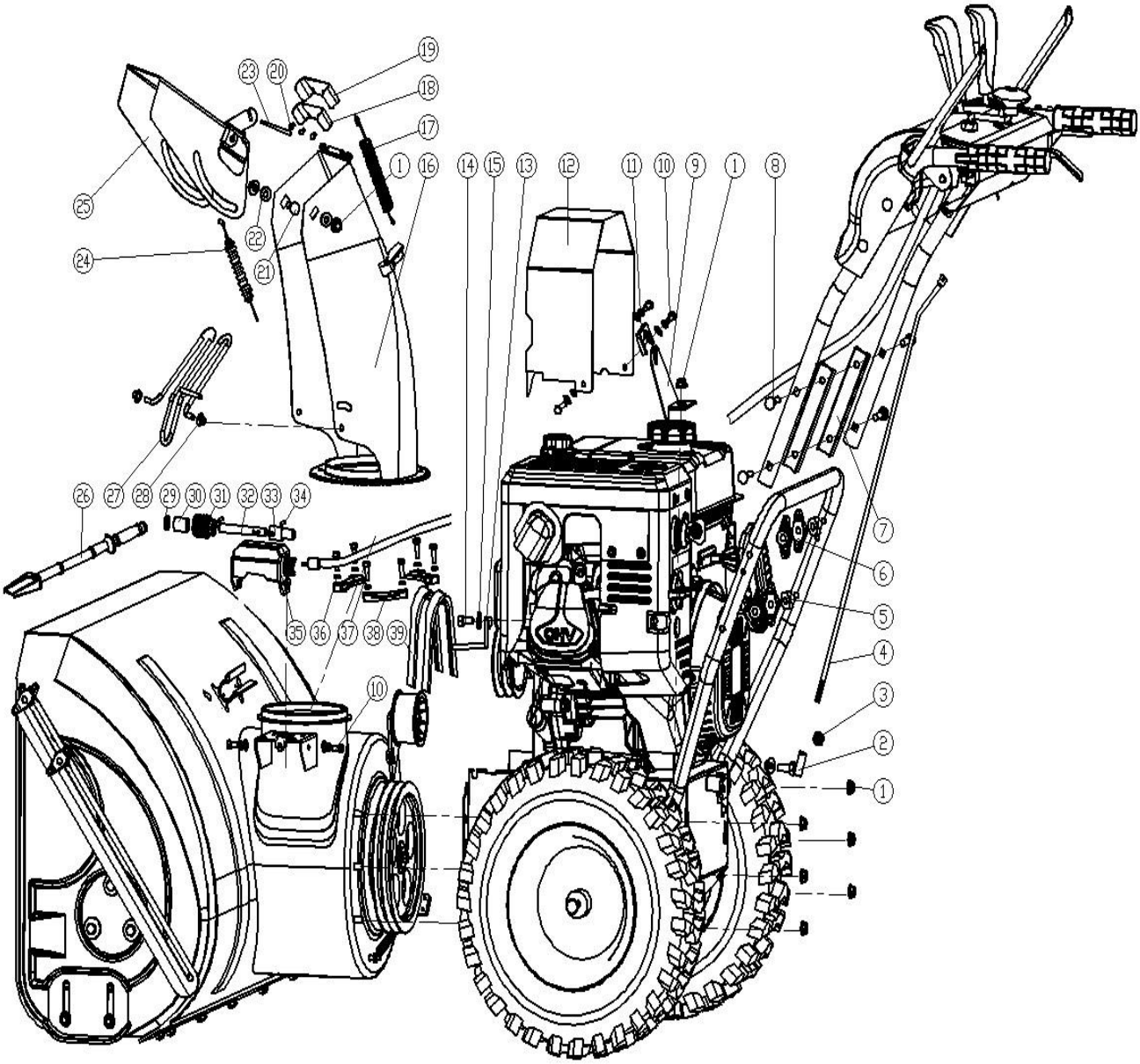

Nr. crt	Denumire produs	Product name	Cod comanda
1	piulita cu flansa m8	jam nut m8	ps603-1-01
2	bucsa schimbator	right gimbal	ps603-KC55-10
3	piulita m8	nut m8	ps603-1-03
4	tija schimbator	gear connector bar	ps603-KC30-04
5	piulita	nut	ps603-KC55-04
6	piulita	nut	ps603-1-06

7	ghidaj coarne	armrest pads	ps603-KC30-05
8	surub m8x75	bolt m8x75	ps603-1-08
9	placa	plate	ps603-KC30-06
10	surub m6x12	bolt m6x12	ps603-1-10
11	saiba plata	washer	ps603-KC26-16
12	carcasa protectie	belt cover	ps603-KC90-07
13	ghidaj	belt rod	ps603-KC90-12
14	surub m6x12	bolt m6x12	ps603-1-14
15	saiba	washer	ps603-1-15
16	tun	chute assemble	ps603-KC26-06
17	arc recuperator	spring	ps603-KC55-18
21	surub	bolt	ps603-1-21
22	saiba cauciuc	rubber washer	ps603-KC55-26
25	cap redirectionare	head redirection	ps603-KC26-08
26	lopatica	shovel	ps603-KC55-24
27	spargator	bn	ps603-KC26-09
29	saiba	washer	ps603-KC55-15
30	tampon	long pad	ps603-KC26-11
31	melc	hollow worm	ps603-KC30-14
32	ax	axle	ps603-KC26-12
33	conector inferior	lower connecting pipe	ps603-KC26-15
34	stift elastic 3x20	spring washer 3x20	ps603-1-34
35	carcasa melc	rotating aluminum braket	ps603-KC26-10
36	stift elastic 3x20	spring washer 3x20	ps603-1-36
37	surub m6x12	bolt m6x12	ps603-1-37
38	ghidaj tun zapada	cannon guidance	ps603-KC55-23
39	curea	belt	ps603-13X1005

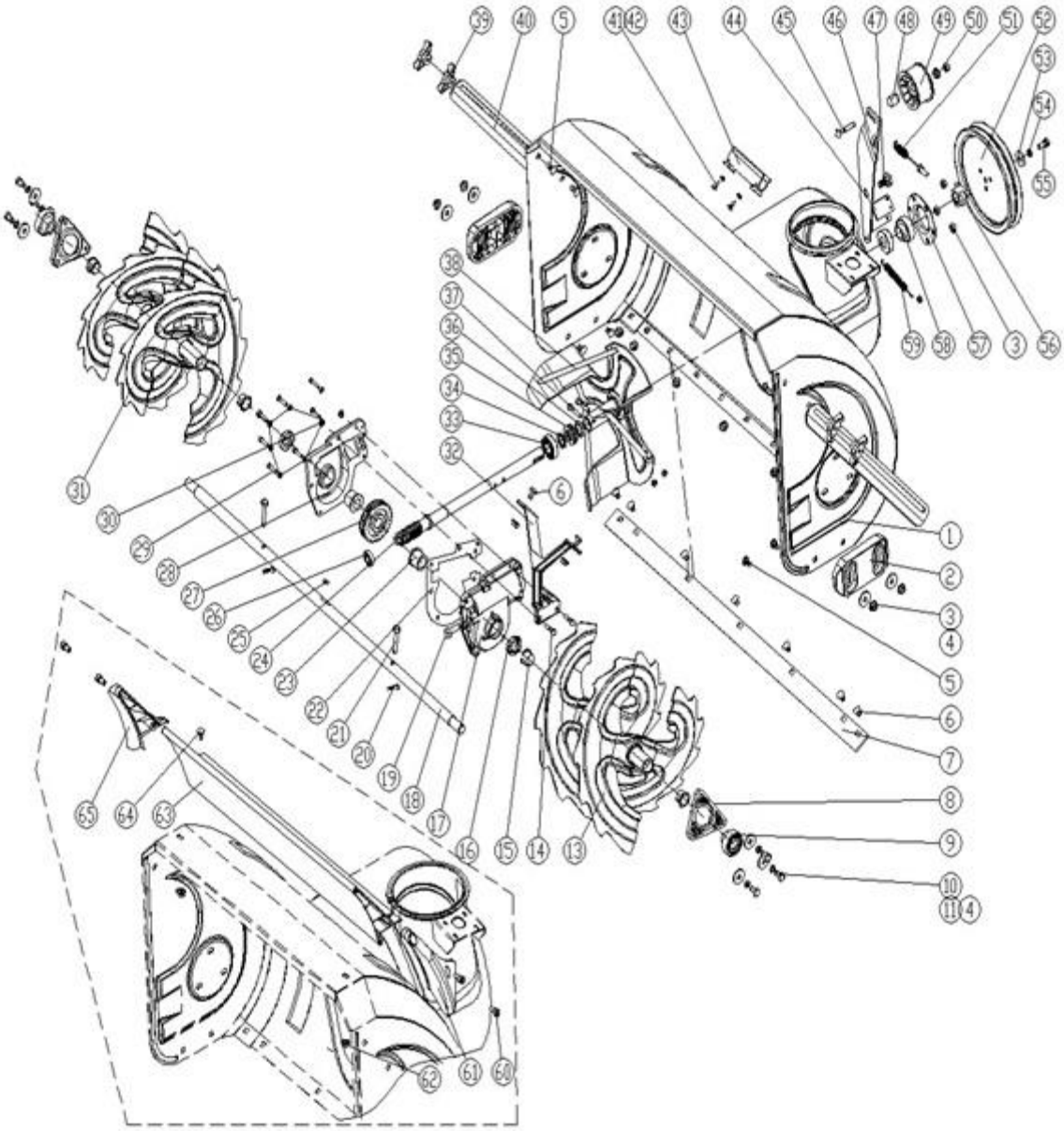

Nr. Crt	Denumire produs	Product name	Cod comanda
1	cuva	housing	ps603-KC30-01-01
2	patina	skid shoe	ps603-KC26-01-02
3	piulita cu autoblocare m8	nut m8	ps603-2-03
4	saiba	washer	ps603-2-04
5	surub m6x20	bolt m6x20	ps603-2-05
6	surub m8x15	bolt m8x15	ps603-2-06
7	lama cutit	shave plate	ps603-KC30-01-02
8	capac rulment	bearing cover	ps603-KC55-01-04
9	rulment	bearing	ps603-KC55-01-05

10	surub m8x15	bolt m8x15	ps603-2-10
11	saiba grover 8	spring washer	ps603-2-11
13	freza stanga	left auger	ps603-KC90-01-03
14	surub m6x30	bolt m6x30	ps603-2-14
15	manson arbore	bushing	ps603-KC55-01-06
16	simering 19x30x7	sealing ring 19x30x7	ps603-2-16
17	semicarter stnaga	left worm housing	ps603-KC90-01-13
18	arbore freze	output shaft	ps603-KC90-01-04
19	buson m10x10	bolt m10x10	ps603-2-19
20	siguranta bolt	saftey bolt	ps602-KC55-01-11
21	bolt	pin	ps602-KC55-29
22	garnitura semicarter	gasket	ps603-KC90-01-14
23	bucsa	bush	ps603-KC55-01-09
24	arbore melcat	gear pad	ps603-KC90-01-08
25	pana 6x6x18	key 6x6x18	ps603-GB/T1096-1979
26	rulment 16001	bearing 16001	ps603-2-26
27	roata melcata	worm gear	ps603-KC90-01-15
28	semicarter dreapta	right worm housing	ps603-KC90-01-16
29	surub m6x20	bolt m6x20	ps603-2-29
30	piulita m6	nut m6	ps603-2-30
31	freza dreapta	right auger	ps603-KC90-01-05
32	placa	plate	ps603-KC90-01-06A
33	rulment 6004	bearing 6004	ps603-2-33
34	manson ax	shaft sleeve	ps603-KC90-01-17
35	rulment 51104	bearing 51104	ps603-2-35
36	simering 20x35x7	sealing ring 20x35x7	ps603-2-36
37	surub m6x35	bolt m6x35	ps603-2-37
38	turbina	fan	ps603-KC26-01-05
39	piulita	nut	ps603-KC55-25
40	bara	support bar	ps603-KC26-01-06
41	surub autofiletant	screw	ps603-2-41
42	saiba	washer	ps603-2-42
43	suport lopatica	shovel support	ps603-KC55-01-21
44	placa franare	brake plate	ps603-KC90-01-18
45	surub m8x40	bolt m8x40	ps603-2-45
46	placa fixare	the fixing plate	ps603-KC90-01-10
47	surub	bolt	ps603-2-47
48	manson	sleeve	ps603-KC55-01-24
49	rola intinzator	tensioner pulley	ps603-KC55-01-27
50	saiba	washer	ps603-KC55-01-26
51	arc	spring	ps603-KC55-01-28
52	fulie	pulley	ps603-KC90-01-11

53	saiba	washer	ps603-2-53
54	saiba elastica	spring washer	ps603-2-54
55	surub m8x20	bolt m8x20	ps603-2-55
56	ax rola	axle	ps603-KC26-01-08
57	capac rulment	bearing cover	ps603-KC55-01-22
58	rulment special	special bearing	ps603-SB204
59	arc intinzator	spring	ps603-KC55-02-19
60	surub m8x16	bolt m8x16	ps603-2-60
61	protectie	protection	ps603-KC26-01-09
62	surub m8	bolt m8	ps603-2-62
63	panou	panel	ps603-KC30-01-03
64	surub m8x20	bolt m8x20	ps603-2-64
65	protectie	protection	ps603-2-65

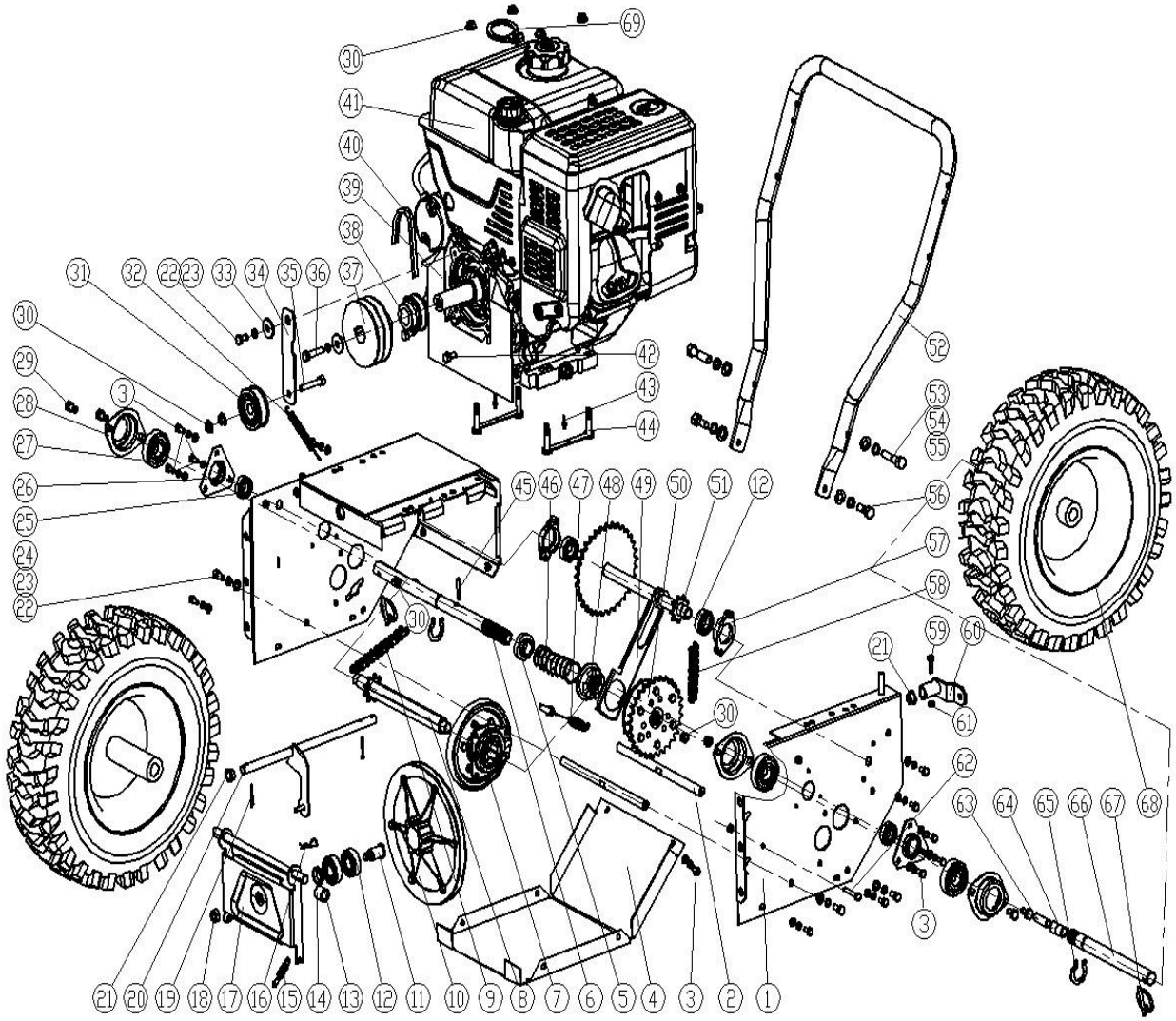

Nr. crt	Denumire produs	Product name	Cod comanda
1	carcasa cutie de viteze	transmission box assembly	ps603-KC30-02-01
2	ax	axle	ps603-KC90-02-31
3	surub m6x12	bolt m6x12	ps603-3-03
4	capac cutie de viteze	bottom plate for transmission box	ps603-KC90-02-01
5	bucsa	bush	ps603-KC30-02-02
6	ax roti	long shaft	ps603-KC30-02-03
7	ansamblu roata transmisie	transmission wheel assembly	ps603-KC55-02-15
8	ax transmisie	transmission axle	ps603-KC30-02-04
9	lant roata dintata	chain	ps603-084-44
10	fulie	pulley	ps603-KC90-02-08
11	ax disc	axle	ps603-KC90-02-13
12	rulment 6003-2rz	bearing 6003-2rz	ps603-3-12
13	bucsa rulment	delta bearing seat	ps603-KC90-02-34
14	bucsa distantier	spacer bushing	ps603-KC55-02-10
15	arc 6	spring 6	ps603-KC55-02-07
16	siguranta bolt	clip	ps603-3-16
17	suport disc frictiune	support for friction disc	ps603-KC55-02-09
18	piulita m10	nut m10	ps603-3-18
19	bolt 2.5x25	pin 2.5x25	ps603-3-19
20	brat actionare	drive arm	ps603-KC90-02-06
21	bucsa plastic	bush	ps603-KC90-02-07
22	surub m8x16	bolt m6x16	ps603-3-22
23	saiba grower	spring washer	ps603-3-23
24	saiba plata	washer	ps603-3-24
25	rulment 6002-2rz	bearing 6002-2rz	ps603-3-25
26	protectie rulment	bearing protection	ps603-KC90-02-12
27	rulment 6205-2rz	bearing 6205-2rz	ps603-3-27
28	protectie rulment	bearing protection	ps603-KC90-02-11
29	surub m8x16	bolt m8x16	ps603-3-29
30	piulita m8	nut m8	ps603-3-30
31	rola intinzator	tensioner pulley	ps603-KC55-02-21
32	arc	spring	ps603-KC90-02-15
33	saiba tampon	washer	ps603-KC55·02-20
34	brat intinzator	small tension plate	ps603-KC90-02-28
35	surub m8x45	bolt m8x45	ps603-3-35
36	surub m8x35	bolt m8x35	ps603-3-36
37	fulie	pulley	ps603-KC90-02-16
38	rola principala 1	main roll	ps603-KC90-02-17
39	protectie curea	belt protection	ps603-KC90-02-18
40	curea	belt	ps603-37X132BE

41	motor	engine	ps603-3-41
42	surub m8x10	bolt m8x10	ps603-3-42
43	nit 4x10	pin 4x10	ps603-3-43
44	surub prindere motor	motor fastening screw	ps603-KC90-02-19
45	bolt 2.5x25	pin 2.5x25	ps603-3-45
46	arc diferential	differential arc	ps603-KC30-02-05
47	cablu ambreiaj	clutch cable	ps603-3-47
48	cuplaj	coupling	ps603-KC30-02-07
49	furca diferential	differential fork	ps603-KC30-02-08
50	diferential	differential	ps603-KC30-02-09
51	ansamblu roata transmisie	transmission wheel assembly	ps603-KC30-02-10
52	suport coarne	horn supports	ps603-KC90-02-21
53	surub m10x45	bolt m10x45	ps603-3-53
54	saiba grower 10	spring washer 10	ps603-3-54
55	saiba plata 10	washer 10	ps603-3-55
56	surub m10x25	bolt m10x25	ps603-3-56
57	protectie rulment	bearing protection	ps603-KC30-02-11
58	lant diferential	differential chain	ps603-084-38
59	surub m6x30	bolt m6x30	ps603-3-59
60	brat schimbator	arm shifter	ps603-KC30-02-12
61	piulita	nut	ps603-3-61
62	surub m6x35	bolt m6x35	ps603-3-62
63	ax	axle	ps603-KC30-02-13
64	manson ax	shaft sleeve	ps603-15X17X15
65	siguranta	clip	ps603-GB894.1-86
66	ax roti	wheel axle	ps603-KC30-02-14
67	bolt 8x50	pin 8x50	ps603-KCW-03
68	roata completa 16X6.5x8	wheel	ps603-16X6.5x8
68a	anvelopa	tire	ps603-16X6.5-8
69	inel bronz 1	bronze ring 1	ps603-KC30-02-17
70	inel bronz 2	bronze ring 2	ps603-KC30-02-19

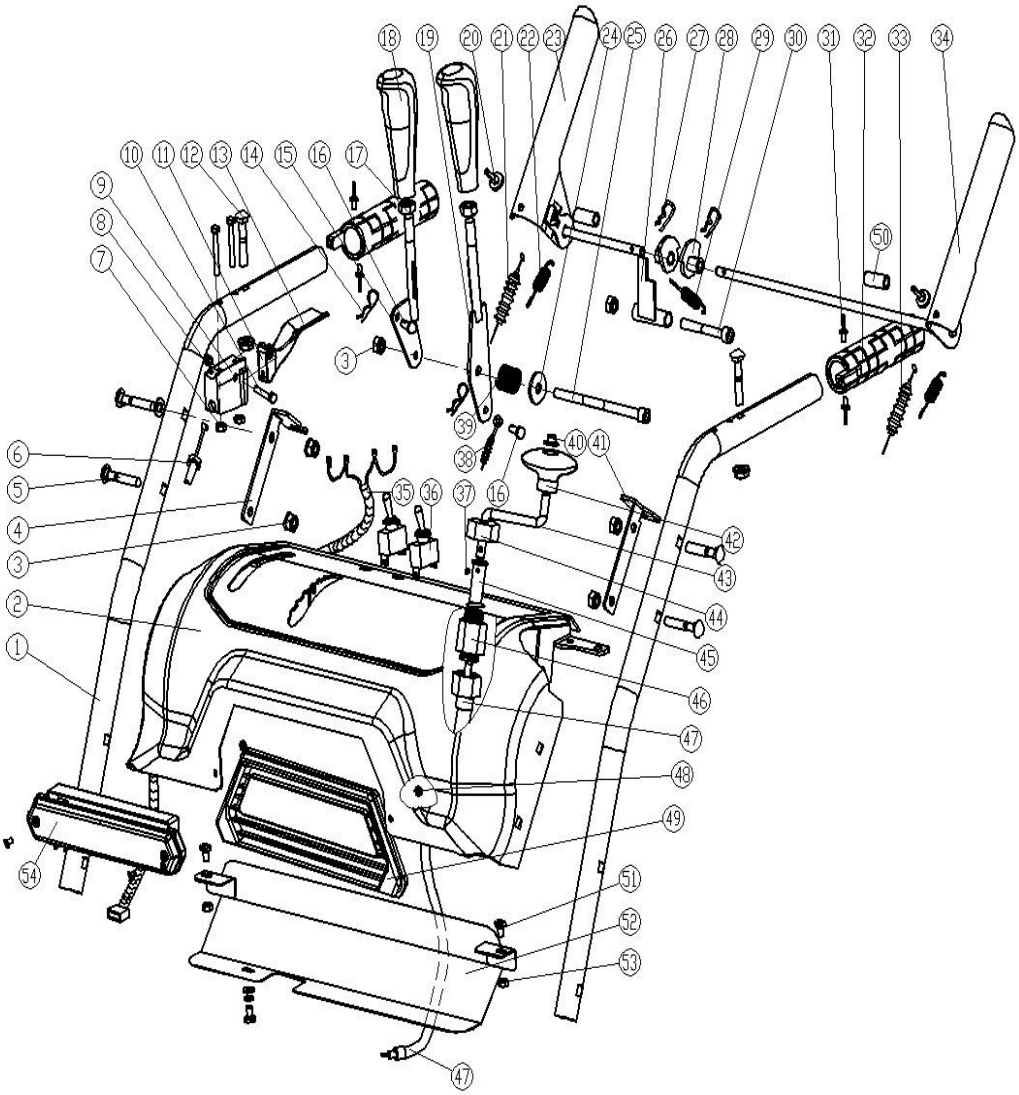

Nr. crt	Denumire produs	Product name	Cod comanda
1	corn	handle	ps603-KC30-03-01
2	panou comanda	panel	ps603-KC30-03-02
3	piulita m8	nut m8	ps603-4-03
4	placa prindere cablu dr	cable grip plate	ps603-KC30-03-03
5	surub m8x40	bolt m8x40	ps603-4-05
6	cablu diferential	differential cable	ps603-KC30-02-06
7	piulita m5	nut m5	ps603-4-07
8	piulita m6	nut m6	ps603-4-08
9	suport maneta diferential	differential lever support	ps603-KC30-03-05
10	bolt	pin	ps603-KC30-03-06
11	surub m5x30	bolt m5x30	ps603-4-11
12	surub m8x35	bolt m8x35	ps603-4-12
13	maneta diferential	differential lever	ps603-KC30-03-08

14	siguranta bolt	clip	ps603-4-14
15	maneta schimbator	shift lever	ps603-KC30-03-09
16	bolt	pin	ps603-KC55-03-06
17	piulita m10	nut m10	ps603-4-17
18	maner	handle	ps603-KC30-03-10
19	maneta control	control lever	ps603-KC30-03-11
21	cablu actionare	drive cable	ps603-KC90-04-02
22	arc	spring	ps603-KC55-03-17
23	maneta actionare dr	drive lever	ps603-KC30-03-12
24	saiba 8	washer 8	ps603-4-24
25	surub m8x12	bolt m8x12	ps603-4-25
26	limitator	limiter	ps603-KC55-03-12
27	siguranta bolt	safety	ps603-4-27
28	cama	cama	ps603-KC55-03-13
29	arc	spring	ps603-KC55-03-11
30	surub m8x60	bolt m8x60	ps603-4-30
31	surub autofiletant 3x8	screw 3x8	ps603-4-31
32	maner corn incalzit	heated horn handle	ps603-KC90-04-04
33	cablu actionare autopropulsie	self-propelled drive cable	ps603-KC90-01-12
34	maneta actionare stg	drive lever	ps603-KC30-03-13
35	cablaj electric	electrical wiring	ps603-KC30-03-14
36	intrerupator cu led	intrerupator cu led	ps603-HY64
37	surub m4x6	bolt m4x6	ps603-4-37
38	cablu ghidare inaltime	height guide cable	ps603-KC55-03-21
39	arc pretensionare	tensioner spring	ps603-KC55-03-04
40	fixator 8	hat piece 8	ps603-KCW-01
41	placa prindere cablu stg	cable grip plate	ps603-KC30-03-15
42	maner rotativ	rotary handle	ps603-4-42
43	manivela	crank	ps603-KC30-03-20
44	piulita superioara	upper nut	ps603-KC30-03-21
45	ghidaj manivela	crank guide	ps603-KC30-03-28
46	piulita inferioara	lower nut	ps603-KC30-03-23
47	ansamblu cablu flexibil	flexible cable assembly	ps603-KC30-03-22
48	surub m6x8	bolt m6x8	ps603-4-48
49	suport far	headlamp support	ps603-KC30-03-24
51	surub m6x12	bolt m6x12	ps603-4-51
52	intaritura	hardener	ps603-KC30-03-19
53	puilita m6	nut m6	ps603-4-53
54	far leduri	led light	ps603-KC21-03-15