RURIS

RURIS power for nature

Producător motoutilaje

Documentatie tehnică

Documentatie tehnica masina de gazon Dac 130XL, Dac 9700S, Expert 130xl

**** NOTA INFORMATIVA: Pentru acest utilaj exista doua tipuri de motorizare . Consultati intreaga documentatie.***

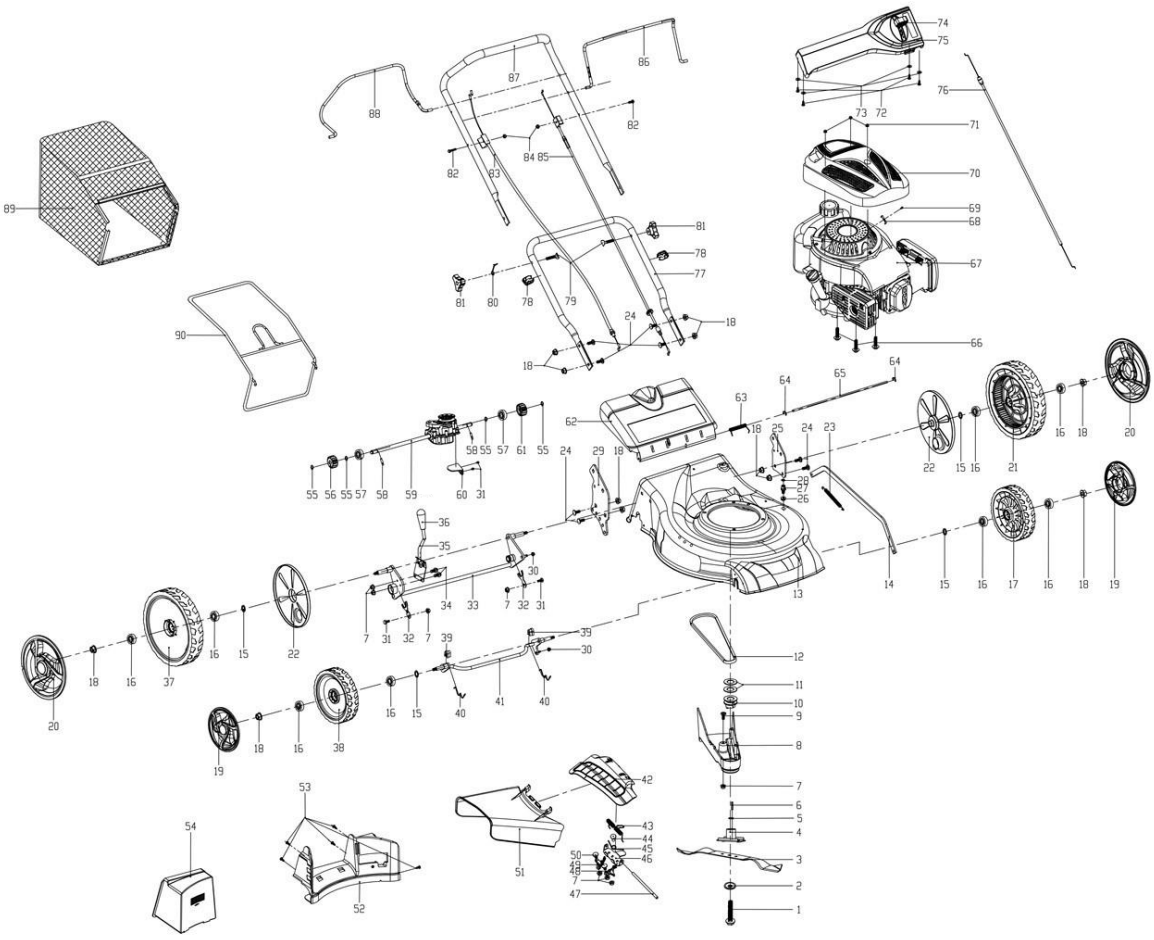

Nr.crt	Denumire produs	Product name	Cod comanda
1	surub	screw	ps130xl-1-1
2	saiba	washer	ps130xl-1-2
3	cutit	blade	ps130xl-1-3
4	suport cutit	Blade holder	ps130xl-1-4
5	saiba	washer	ps130xl-1-5
6	pana	key	ps130xl-1-6
7	piulita	nut	ps130xl-1-7

Craiova, ROMÂNIA

8	capac curea	belt cover	ps130xl-1-8
9	surub	screw	ps130xl-1-9
10	fulie	driving belt wheel	ps130xl-1-10
11	saiba	washer	ps130xl-1-11
12	curea	belt	ps130xl-1-12
13	carcasa	housing	ps130xl-1-13
14	tija ajustare inalitime	height adjustament rod	ps130xl-1-14
15	saiba	washer	ps130xl-1-15
16	rulment	bearing	ps130xl-1-16
17	roata fata stanga	wheel front left	ps130xl-1-17
18	piulita	nut	ps130xl-1-18
19	capac roata fata	wheel cover	ps130xl-1-19
20	capac roata spate	wheel cover	ps130xl-1-20
21	roata spate stanga	wheel back left	ps130xl-1-21
22	capac	cover	ps130xl-1-22
23	arc	draw spring	ps130xl-1-23
24	surub	screw	ps130xl-1-24
25	suport	support	ps130xl-1-25
26	piulita	nut	ps130xl-1-26
27	stut	wash mouth	ps130xl-1-27
28	oring	o-ring	ps130xl-1-28
29	suport	support	ps130xl-1-29
30	piulita	nut	ps130xl-1-30
31	surub	screw	ps130xl-1-31
32	placa fixare	fixed plate	ps130xl-1-32
33	ax roti spate	rear wheel axle	ps130xl-1-33
34	surub	screw	ps130xl-1-34
35	levire ajustare inaltime	adjustment lever	ps130xl-1-35
36	maner	handle	ps130xl-1-36
37	roata spate dreapta	wheel back right	ps130xl-1-37
38	roata fata dreapta	wheel front right	ps130xl-1-38
39	saiba	washer	ps130xl-1-39
40	siguranta	steel wire	ps130xl-1-40
41	ax roti fata	front axle	ps130xl-1-41
42	placa etansare	seal board	ps130xl-1-42
43	arc	torsional spring	ps130xl-1-43
44	surub	screw	ps130xl-1-44
45	arc	torsional spring	ps130xl-1-45
46	suport	bracket	ps130xl-1-46
47	tija	rod	ps130xl-1-47
48	capac	cover	ps130xl-1-48

49	capac	cover	ps130xl-1-49
50	surub	screw	ps130xl-1-50
51	capac evacuare laterala	side discharge	ps130xl-1-51
52	deflector	rear baffle	ps130xl-1-52
53	surub	screw	ps130xl-1-53
54	capac	plug	ps130xl-1-54
55	siguranta	shaft ring	ps130xl-1-55
56	roata dintata	gear	ps130xl-1-56
57	rulment	bearing (R8RS)	ps130xl-1-57
58	bolt	pin	ps130xl-1-58
59	ansamblu transmisie	Selfpropelled Assy.	ps130xl-1-59
60	placa	plate	ps130xl-1-60
61	roata dintata	gear	ps130xl-1-61
62	capac evacuare	rear discharge cover	ps130xl-1-62
63	arc	torsional spring	ps130xl-1-63
64	siguranta	split washer	ps130xl-1-64
65	tija	rod	ps130xl-1-65
66	surub	screw	ps130xl-1-66
67	motor	engine	ps130xl-1-67
68	placa	plate	ps130xl-1-68
69	surub	screw	ps130xl-1-69
70	capota	plastic cover	ps130xl-1-70
71	piulita	nut	ps130xl-1-71
72	surub	screw	ps130xl-1-72
73	saiba	washer	ps130xl-1-73
74	maneta acceleratie	throttle control	ps130xl-1-74
75	pupitru	dash board	ps130xl-1-75
76	cablu acceleratie	throttle control cable	ps130xl-1-76
77	suport maner	support handle	ps130xl-1-77
78	clema cablu	cable clip	ps130xl-1-78
79	surub	screw	ps130xl-1-79
80	carlig	hook	ps130xl-1-80
81	piulita rozeta	2-angle knob	ps130xl-1-81
82	surub	screw	ps130xl-1-82
83	cablu motor stop	engine stop cable	ps130xl-1-83
84	piulita	nut	ps130xl-1-84
85	cablu actionare roti	driving cable	ps130xl-1-85
86	maneta motor stop	engine stop lever	ps130xl-1-86
87	maner	handle	ps130xl-1-87
88	maneta actionare roti	wheel drive lever	ps130xl-1-88
89	sac colector	collecting bag	ps130xl-1-89

90	cadru sac colectare	collection bag frame	ps130xl-1-90
91	arc	spring	ps130xl-1-91

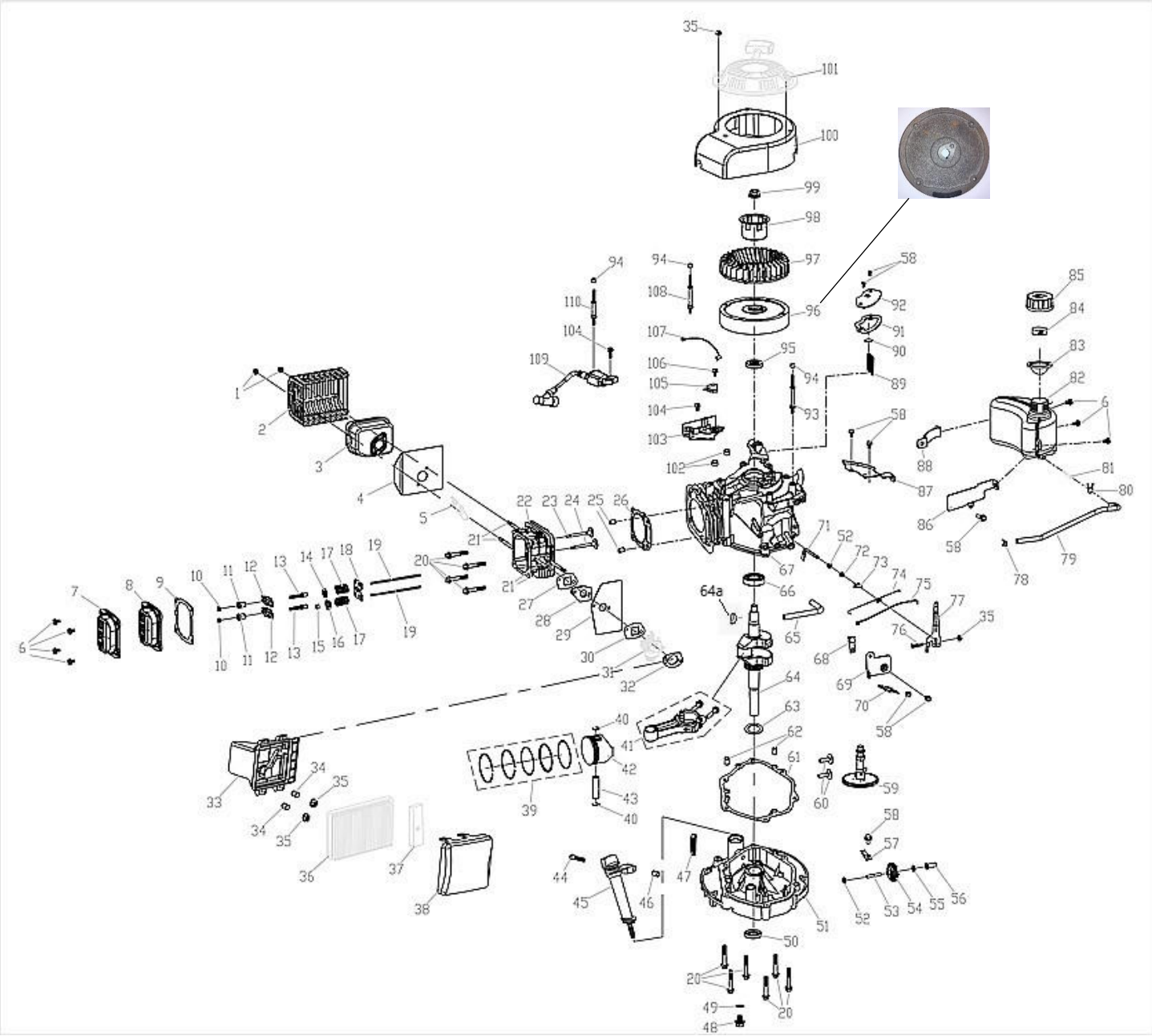

Nr.crt	Denumire produs	Product name	Cod comada
1	piulita	nut	ps130xl-2-1
2	protectie toba esapament	muffler cover	ps130xl-2-2
3	toba esapament	muffler	ps130xl-2-3
4	garnitura toba esapament	heat insulation gasket of muffler	ps130xl-2-4
5	bujie	spark plug	br4t
6	surub	screw	ps130xl-2-6
7	capac bulbutori 1	scald-proof cover	ps130xl-2-7
8	capac culburori 2	cylinder head cover	ps130xl-2-8
9	garnitura capac culbutori	gasket of cylinder cover	ps130xl-2-9
10	piulita	nut	ps130xl-2-10
11	piulita	nut	ps130xl-2-11
12	culbutori	valve rocker	ps130xl-2-12
13	prezon	stud	ps130xl-2-13
14	taler supapa	spring socket	ps130xl-2-14
15	pastila	pill	ps130xl-2-15
16	taler supapa	spring socket	ps130xl-2-16
17	arc	spring	ps130xl-2-17
18	placuta ghidare	guide plate	ps130xl-2-18
19	tija	push rod	ps130xl-2-19
20	surub	screw	ps130xl-2-20
21	prezon	stud	ps130xl-2-21
22	chiuloasa	cylinder head	ps130xl-2-22
23	supapa admisie	intake valve	ps130xl-2-23
24	supapa evacuare	exhaust valve	ps130xl-2-24
25	pin de ghidare	pin	ps130xl-2-25
26	garnitura chiuloasa	gasket of cylinder head	ps130xl-2-26
27	garnitura izolator	insulator gasket	ps130xl-2-27
28	izolator	insulator	ps130xl-2-28
29	garnitura carburator	carburetor gasket	ps130xl-2-29
30	garnitura carburator	carburetor gasket	ps130xl-2-30
31	carburator	carburetor	ps130xl-2-31
32	garnitura filtru aer	gasket of air filter	ps130xl-2-32
33	suport filtru aer	bracket of air filter	ps130xl-2-33
34	bucsa	bush	ps130xl-2-34
35	piulita	nut	ps130xl-2-35
36	filtru aer	paper filter element	ps130xl-2-36
37	filtru aer	foam filter element	ps130xl-2-37
38	capac filtru aer	upper cover	ps130xl-2-38

39	set segmenti	piston ring	ps130xl-2-39
40	siguranta	jump ring	ps130xl-2-40
41	abnsamblu biela	connect rod assy.	ps130xl-2-41
42	piston	piston	ps130xl-2-42
43	bolt piston	pin	ps130xl-2-43
44	surub	screw	ps130xl-2-44
45	joja	oil ruler assy	ps130xl-2-45
46	bucsa	bush	ps130xl-2-46
47	manson	rubber washer	ps130xl-2-47
48	surub golire ulei	bolt	ps130xl-2-48
49	saiba	washer	ps130xl-2-49
50	simering	oil seal	ps130xl-2-50
51	capac carter	crankcase cover	ps130xl-2-51
52	saiba	washer	ps130xl-2-52
53	ax regulator	gear shaft	ps130xl-2-53
54	pinion regulator	speed regulator gear assy.	ps130xl-2-54
55	saiba	washer	ps130xl-2-55
56	culisa	sleeve	ps130xl-2-56
57	placa	pressing plate	ps130xl-2-57
58	surub	screw	ps130xl-2-58
59	ax came	camshaft	ps130xl-2-59
60	tachet	rocker	ps130xl-2-60
61	garnitura carter	gasket of cylinder	ps130xl-2-61
62	pin de ghidare	pin	ps130xl-2-62
63	saiba	washer	ps130xl-2-63
64	arbore motor	crankshaft	ps130xl-2-64
64a	pana	key	ps130xl-2-64a
65	furtun epurator	breather pipe	ps130xl-2-65
66	rulment	roller bearing	ps130xl-2-66
67	carter	crankcase	ps130xl-2-67
68	clema fixare	fixed clip	ps130xl-2-68
69	placa fixare	fixed plate	ps130xl-2-69
70	arc	draw spring	ps130xl-2-70
71	tija regulator	speed regulator rod	ps130xl-2-71
72	simering	oil seal	ps130xl-2-72
73	siguranta	split pin	ps130xl-2-73
74	arc	draw spring	ps130xl-2-74
75	tija acceleratie	throttle lever	ps130xl-2-75
76	surub	screw	ps130xl-2-76
77	brat regulator	speed regulator rocker	ps130xl-2-77
78	clema b	twisting clip b	ps130xl-2-78

79	furtun alimentare	fuel inlet pipe	ps130xl-2-79
80	clema a	twisting clip a	ps130xl-2-80
81	filtru combustibil	fuel filter net	ps130xl-2-81
82	rezervor combustibil	fuel tank	ps130xl-2-82
83	garnitura	seal gasket of fuel tank cap	ps130xl-2-83
84	burete	sponge	ps130xl-2-84
85	buson rezervor	fuel tank cap	ps130xl-2-85
86	suport rezervor stanga	fuel tank bracket (left)	ps130xl-2-86
87	suport rezervor	tank bracket	ps130xl-2-87
88	suport rezervor dreapta	fuel tank bracket (right)	ps130xl-2-88
89	element filtrant	filter net	ps130xl-2-89
90	valva	valve element	ps130xl-2-90
91	garnitura epurator	gasket of respirator	ps130xl-2-91
92	capac epurator	respirator cover plate	ps130xl-2-92
93	prezon	stud	ps130xl-2-93
94	bucsa	bush	ps130xl-2-94
95	simering	oil seal	ps130xl-2-95
96	volanta	flying wheel	ps130xl-2-96
97	ventilator	fan	ps130xl-2-97
98	cuplaj	drived disk	ps130xl-2-98
99	piulita	nut	ps130xl-2-99
100	capac ventilator	wind scooper	ps130xl-2-100
101	ansamblu demaror	start assy	ps130xl-2-101
102	bucsa	bush	ps130xl-2-102
103	frana	brake	ps130xl-2-103
104	surub	screw	ps130xl-2-104
105	buton motor stop	ignition switch assembly	ps130xl-2-105
106	screw	screw	ps130xl-2-106
107	cablu	cable	ps130xl-2-107
108	bush	bush	ps130xl-2-108
109	modul aprindere	ignition assy	ps130xl-2-109
110	prezon	stud	ps130xl-2-110

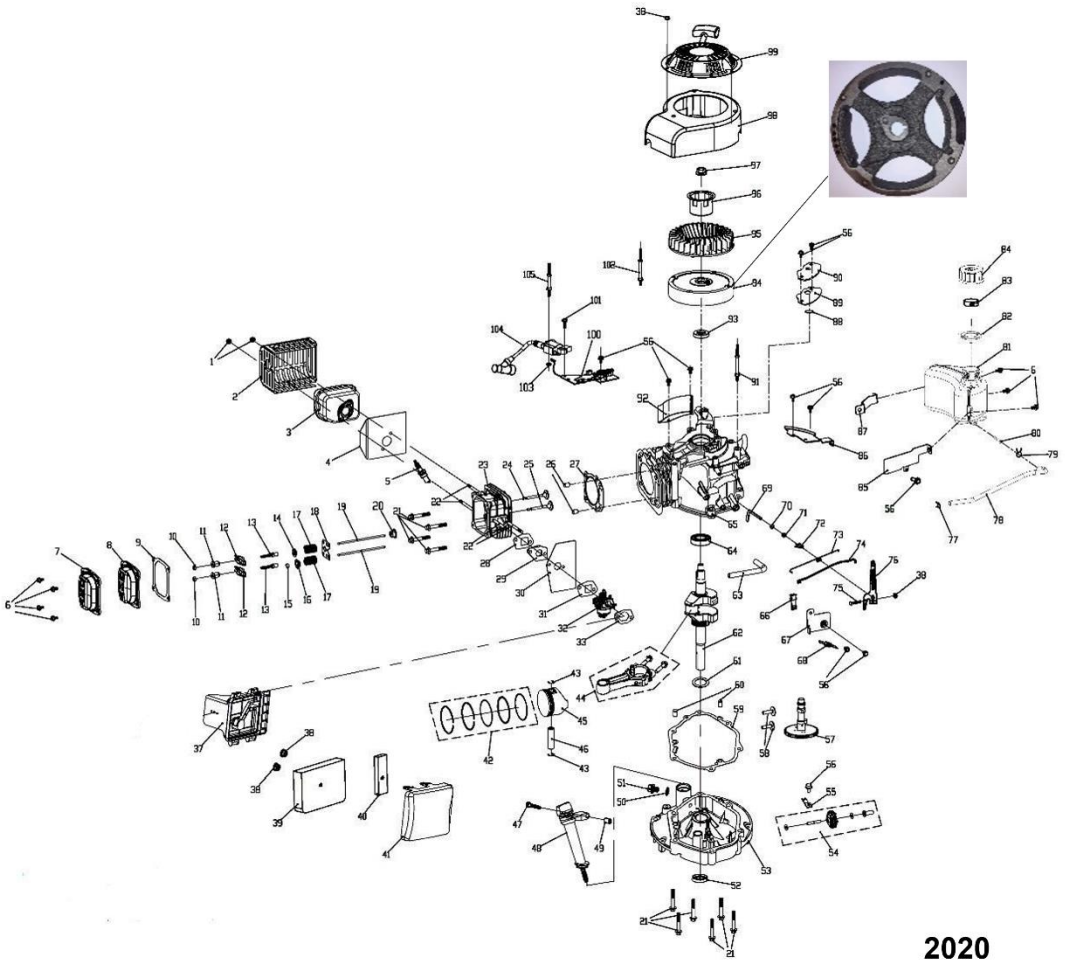

2020

Nr.crt	Denumire produs	Product name	Cod comanda
1	piulita M6	Hexagon flange nut M6	ps130xl.2020-2-1
2	protectie toba esapament	Muffler cover	ps130xl.2020-2-2
3	ansamblu toba esapament	Muffler Assy.	ps130xl.2020-2-3
4	garnitura toba esapament	Heat Insulation Gasket of Muffler	ps130xl.2020-2-4
5	bujie	Spark Plug	br4t
6	surub	Hexagon flange bolts	ps130xl.2020-2-6
7	capac culbutori 1	Scald-proof cover	ps130xl.2020-2-7
8	capac culbutori 2	Cylinder Head cover	ps130xl.2020-2-8
9	garnitura capac culbutori	Gasket of Cylinder cover	ps130xl.2020-2-9
10	piulita	Nut	ps130xl.2020-2-10
11	piulita	Adjust nut	ps130xl.2020-2-11
12	culbutori	Valve rocker	ps130xl.2020-2-12

13	pin	Adjustment bolt	ps130xl.2020-2-13
14	taler supapa	Spring socket	ps130xl.2020-2-14
15	pastila	pill	ps130xl.2020-2-15
16	taler supapa	Valve spring keepers	ps130xl.2020-2-16
17	arc	Spring	ps130xl.2020-2-17
18	placuta ghidare	Push rod assy.	ps130xl.2020-2-18
19	tija	Push rod assy.	ps130xl.2020-2-19
20	simering supapa	Valve oil seal	ps130xl.2020-2-20
21	surub	Hexagon flange bolts	ps130xl.2020-2-21
22	surub	Double head bolt	ps130xl.2020-2-22
23	chiuloasa	Cylinder Head	ps130xl.2020-2-23
24	supapa admisie	Intake Valve	ps130xl.2020-2-24
25	supapa evacuare	Exhaust Valve	ps130xl.2020-2-25
26	pin	Pin	ps130xl.2020-2-26
27	garnitura chiuloasa	Gasket of Cylinder Head	ps130xl.2020-2-27
28	garnitura I	Gasket I of Air Inlet Pipe	ps130xl.2020-2-28
29	conducta aer	Air Inlet Pipe	ps130xl.2020-2-29
30	izolator	Carburetor insulation pad	ps130xl.2020-2-30
31	garnitura filtru aer	Gasket of Air Filter	ps130xl.2020-2-31
32	ansamblu carburator	Carburetor Assy	ps130xl.2020-2-32
33	garnitura filtru aer	Gasket of Air Filter	ps130xl.2020-2-33
37	suport filtru aer	bracket of air filter	ps130xl.2020-2-37
38	piulita	Nut	ps130xl.2020-2-38
39	filtru aer	Foam Filter Element	ps130xl.2020-2-39
40	filtru aer	Foam Filter Element	ps130xl.2020-2-40
41	capac filtru aer	Upper cover	ps130xl.2020-2-41
42	set segmenti	Piston ring	ps130xl.2020-2-42
43	siguranta	Jump ring	ps130xl.2020-2-43
44	ansamblu biela	Connect rod assy.	ps130xl.2020-2-44
45	piston	Piston	ps130xl.2020-2-45
46	bolt piston	Pin	ps130xl.2020-2-46
47	surub	Hexagon flange bolts	ps130xl.2020-2-47
48	joja	Oil ruler assy	ps130xl.2020-2-48
49	bucsa	Refueling device spacer	ps130xl.2020-2-49
50	saiba	washer	ps130xl.2020-2-50
51	bolt	Bolt	ps130xl.2020-2-51
52	simering 25x40x7	Oil seal	ps130xl.2020-2-52
53	capac	Box cover	ps130xl.2020-2-53
54	pinion regulator	Speed Regulator Gear Assy.	ps130xl.2020-2-54

55	placa presiune	Pressing plate	ps130xl.2020-2-55
56	surub	Hexagon flange bolts	ps130xl.2020-2-56
57	ax came	Camshaft	ps130xl.2020-2-57
58	pin	Pin	ps130xl.2020-2-58
59	garnitura carter	Gasket of Cylinder	ps130xl.2020-2-59
60	pin de ghidare	Pin	ps130xl.2020-2-60
61	saiba	washer	ps130xl.2020-2-61
62	ansamblu arbore	Crankshaft Assy	ps130xl.2020-2-62
63	furtun aer	Freather pipe	ps130xl.2020-2-63
64	rulment	Roller bearing	ps130xl.2020-2-64
65	carter	Crankcase	ps130xl.2020-2-65
66	clema	Fixed clip	ps130xl.2020-2-66
67	placa	Speed-regulating fixing plate	ps130xl.2020-2-67
68	arc	Draw spring	ps130xl.2020-2-68
69	tija regulator	Speed Regulator Rod	ps130xl.2020-2-69
70	saiba	washer	ps130xl.2020-2-70
71	simering	Oil seal	ps130xl.2020-2-71
72	siguranta	Split pin	ps130xl.2020-2-72
73	arc	Draw spring	ps130xl.2020-2-73
74	parghie regulator	Handspike of Valve	ps130xl.2020-2-74
75	surub	Screw	ps130xl.2020-2-75
76	brat regulator	Speed Regulator Rocker	ps130xl.2020-2-76
77	clema B	Twisting clip B	ps130xl.2020-2-77
78	furtun alimentare	Fuel Inlet Pipe	ps130xl.2020-2-78
79	Clema A	Twisting clip A	ps130xl.2020-2-79
80	element filtrant	Fuel filter net	ps130xl.2020-2-80
81	rezervor combustibil	Fuel tank	ps130xl.2020-2-81
82	garnitura	Gasket of tank cap	ps130xl.2020-2-82
83	burete	Foam Filter of tank cap	ps130xl.2020-2-83
84	buson rezervor	Fuel tank cap	ps130xl.2020-2-84
85	suport rezervor stanga	Fuel tank bracket (left)	ps130xl.2020-2-85
86	suport rezervor	Tank Bracket	ps130xl.2020-2-86
87	suport rezervor dreapta	Fuel tank bracket (right)	ps130xl.2020-2-87
88	valva	Valve Element	ps130xl.2020-2-88
89	garnitura epurator	Gasket of Respirator	ps130xl.2020-2-89
90	capac epurator	Respirator Cover Plate	ps130xl.2020-2-90
91	bolt	Double head bolt	ps130xl.2020-2-91
92	deflector	Wind deflector	ps130xl.2020-2-92
93	simering	Oil seal	ps130xl.2020-2-93

94	volanta	Flying wheel	ps130xl.2020-2-94
95	ventilator	Fan	ps130xl.2020-2-95
96	cuplaj	Drived disk	ps130xl.2020-2-96
97	piulita	Nut	ps130xl.2020-2-97
98	capac ventilator	Wind scooper	ps130xl.2020-2-98
99	demaror	Recoil starter	ps130xl.2020-2-99
100	frana	Brakes	ps130xl.2020-2-100
101	surub	Hexagon flange bolts	ps130xl.2020-2-101
102	bolt	Air director Bush	ps130xl.2020-2-102
103	saiba	washer	ps130xl.2020-2-103
104	modul aprindere	Ignition Assy	ps130xl.2020-2-104
105	bolt	Double head bolt	ps130xl.2020-2-105