RURIS

RURIS power for nature

Producător motoutilaje

Documentatie tehnică

Documentatie tehnica freza de zapada Everest 1009

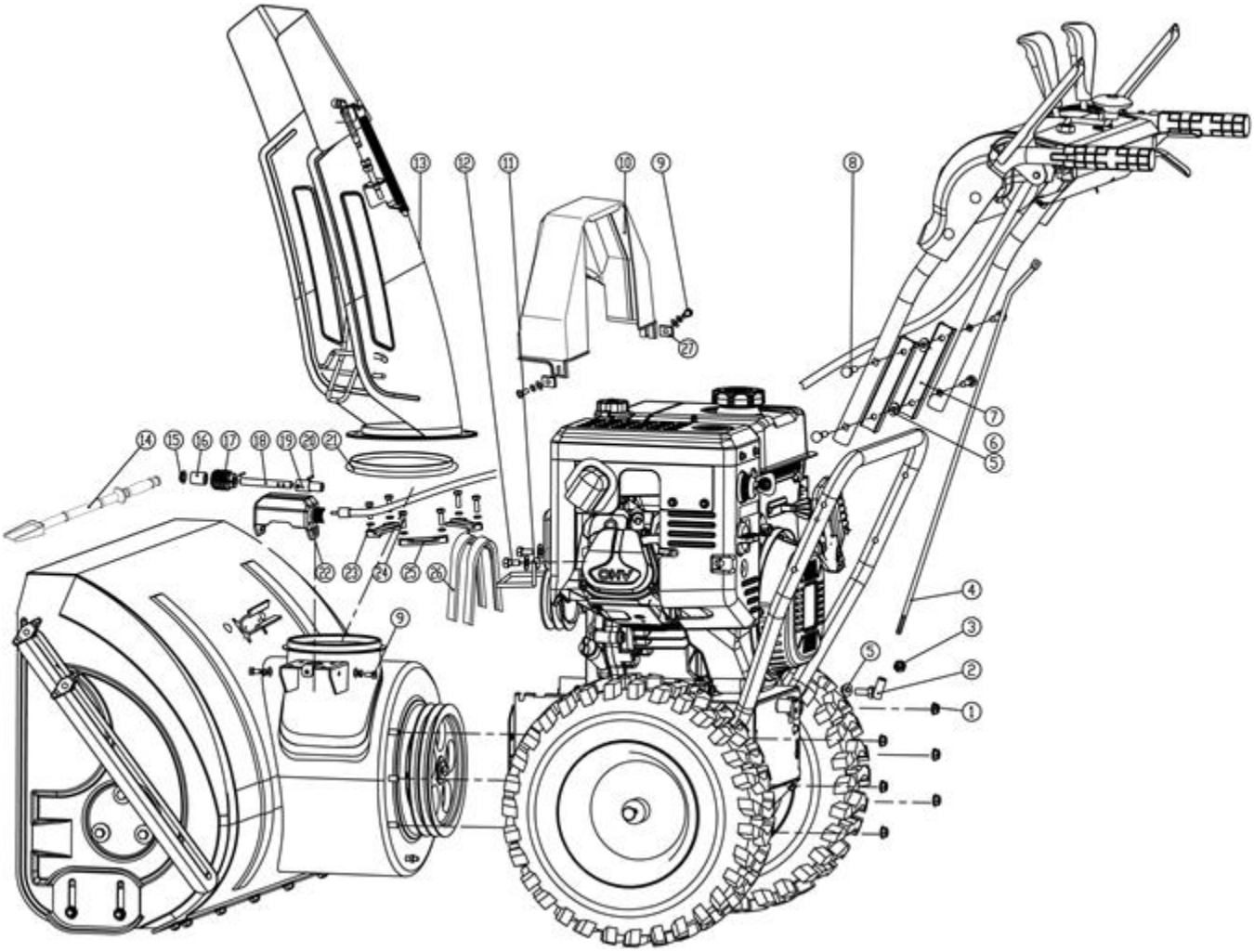

Nr.crt	Denumire produs	Product name	Cod comanda
1	piulita m8	jam nut M8	ps1009-1-01
2	bucsa schimbator	right gimbal	ps1009-1-02
3	piulita m8x1	nut M8x1	ps1009-1-03
4	tija	gear connector bar	ps1009-1-04
5	piulita m8	nut M8	ps1009-1-05
6	saiba 8x22x2	concave gasket / 8 * 22 * 2	ps1009-1-06
7	ghidaj coarne	armrest aluminum pad	ps1009-1-07
8	surub m8x55	bolts M8X55	ps1009-1-08
9	surub m6x16	hexagon head combination bolts M6X16	ps1009-1-09
10	capac curea	belt cover	ps1009-1-10
11	ghidaj	belt rod	ps1009-1-11

Craiova, ROMÂNIA

12	surub m8x20	hexagon head bolts M8X20	ps1009-1-12
13	ansamblu jgheab	chute assebmly	ps1009-1-13
14	lopatica	snow shovel	ps1009-1-14
15	saiba	helical bracket washers	ps1009-1-15
16	tampon	long washers	ps1009-1-16
17	melc	hollow worm	ps1009-1-17
18	ax	mandrel	ps1009-1-18
19	conector inferior	lower connection tube	ps1009-1-19
20	siguranta 3x18	elastic cylindrical pin 3 * 18	ps1009-1-20
21	garnitura jgheab	snow shute gasket	ps1009-1-21
22	carcasa melc	rotating aluminum frame	ps1009-1-22
23	saiba grower	elastic washer 6	ps1009-1-23
24	surub m6x16	cross recessed pan head screws M6X16	ps1009-1-24
25	ghidaj tun zapada	fixed piece	ps1009-1-25
26	curea	belt	ps1009-1-26
27	placa	belt cover gasket	ps1009-1-27

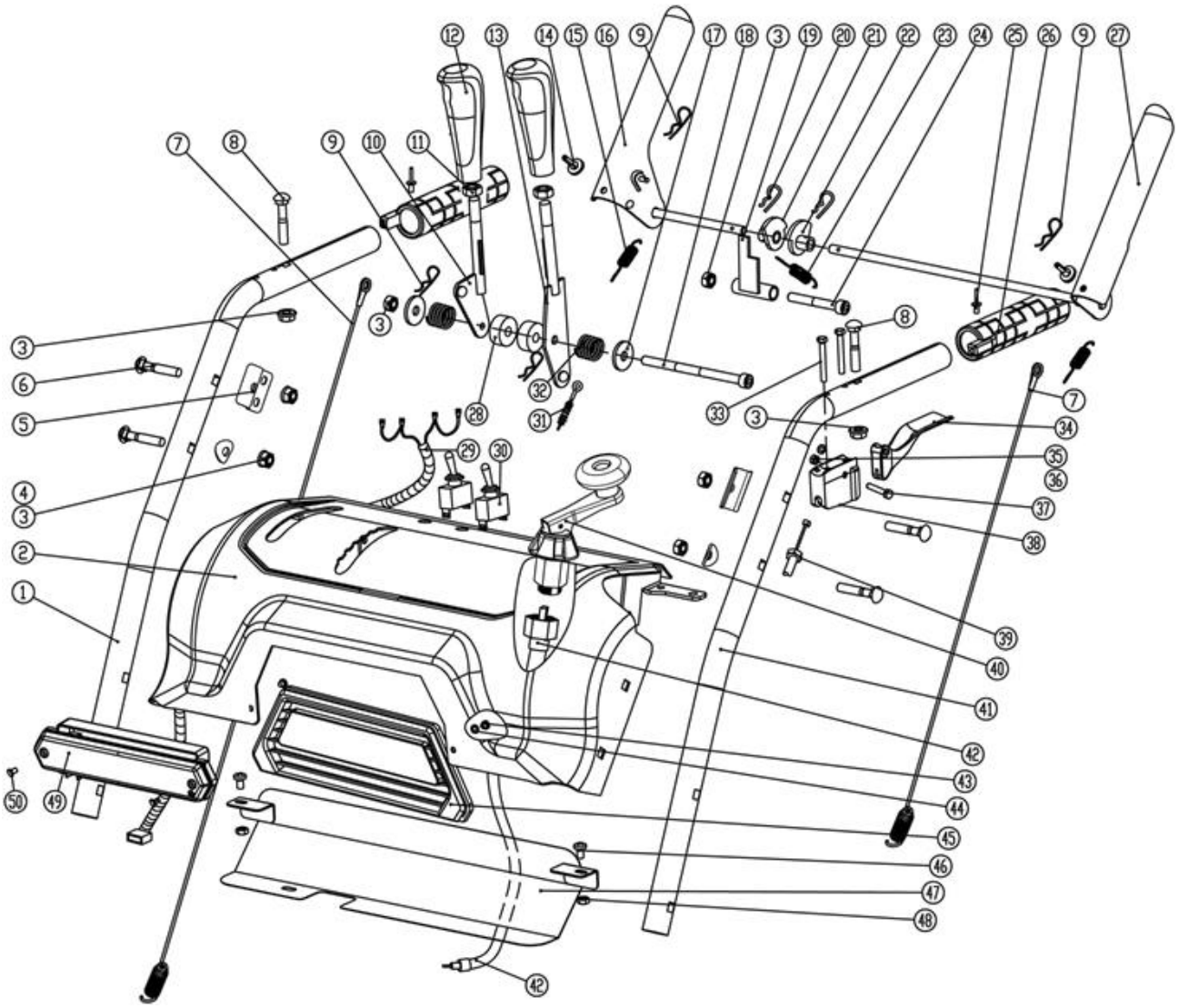

Nr.crt	Denumire produs	Product name	Cod comanda
1	corn dreapta	upper handle, right	ps1009-2-01
2	panou de control	g panel, motor control	ps1009-2-02
3	piulita m8	nut M8	ps1009-2-03
4	saiba 8x22x2	washer 8x22x2	ps1009-2-04
5	placa	plate	ps1009-2-05
6	surub m8x40	bolt M8x40	ps1009-2-06
7	cablu	long wire	ps1009-2-07
8	surub m8x35	bolt M8x35	ps1009-2-08
9	siguranta 1.5x25	B pin 1.5x25	ps1009-2-09
10	maneta schimbator	walking lever	ps1009-2-10
11	piulita m10	nut M10	ps1009-2-11
12	maner mateta schimbator	gear handle	ps1009-2-12

13	maneta control jgheab	chute cap handle	ps1009-2-13
14	saiba de cauciuc	rubber washer	ps1009-2-14
15	arc	handle srping	ps1009-2-15
16	maner dreapta	right handle	ps1009-2-16
17	saiba 8	big washer 8	ps1009-2-17
18	surub m8x150	screw M8x150	ps1009-2-18
19	siguranta	stopper	ps1009-2-19
20	siguranta	pinchock	ps1009-2-20
21	cama dreapta	right cam	ps1009-2-21
22	cama stanga	left cam	ps1009-2-22
23	arc	stop spring	ps1009-2-23
24	surub m8x60	screw M8x60	ps1009-2-24
25	nit 4x10	rivet 4x10	ps1009-2-25
26	maner incalzit	heated handle	ps1009-2-26
27	maneta stanga	left handle	ps1009-2-27
28	manson	short sleeve	ps1009-2-28
29	cablaj	input wire	ps1009-2-29
30	intrerupator	switch	ps1009-2-30
31	cablu	long wire	ps1009-2-31
32	arc	preset spring	ps1009-2-32
33	surub m5x35	screw M5x35	ps1009-2-33
34	maneta diferential	differntial lever	ps1009-2-34
35	piulita m6	Nut M6	ps1009-2-35
36	saiba 6	flat washer 6	ps1009-2-36
37	surub	handle bolt	ps1009-2-37
38	suport maneta diferential	differntial lever seat	ps1009-2-38
39	cablu diferential	differential wire	ps1009-2-39
40	manivela	rotate assembly	ps1009-2-40
41	corn stanga	upper handle, left	ps1009-2-41
42	cablu flexibil	soft shaft assembly	ps1009-2-42
43	surub m6x10	screw M6x10	ps1009-2-43
44	saiba 6	flat washer 6	ps1009-2-44
45	suport far	panel	ps1009-2-45
46	surub m6x16	bolt M6x16	ps1009-2-46
47	capac	cover	ps1009-2-47
48	piulita m6	jam nut M6	ps1009-2-48
49	far	long LED	ps1009-2-49
50	surub st3.5x16-f	bolt ST3.5x16-F	ps1009-2-50

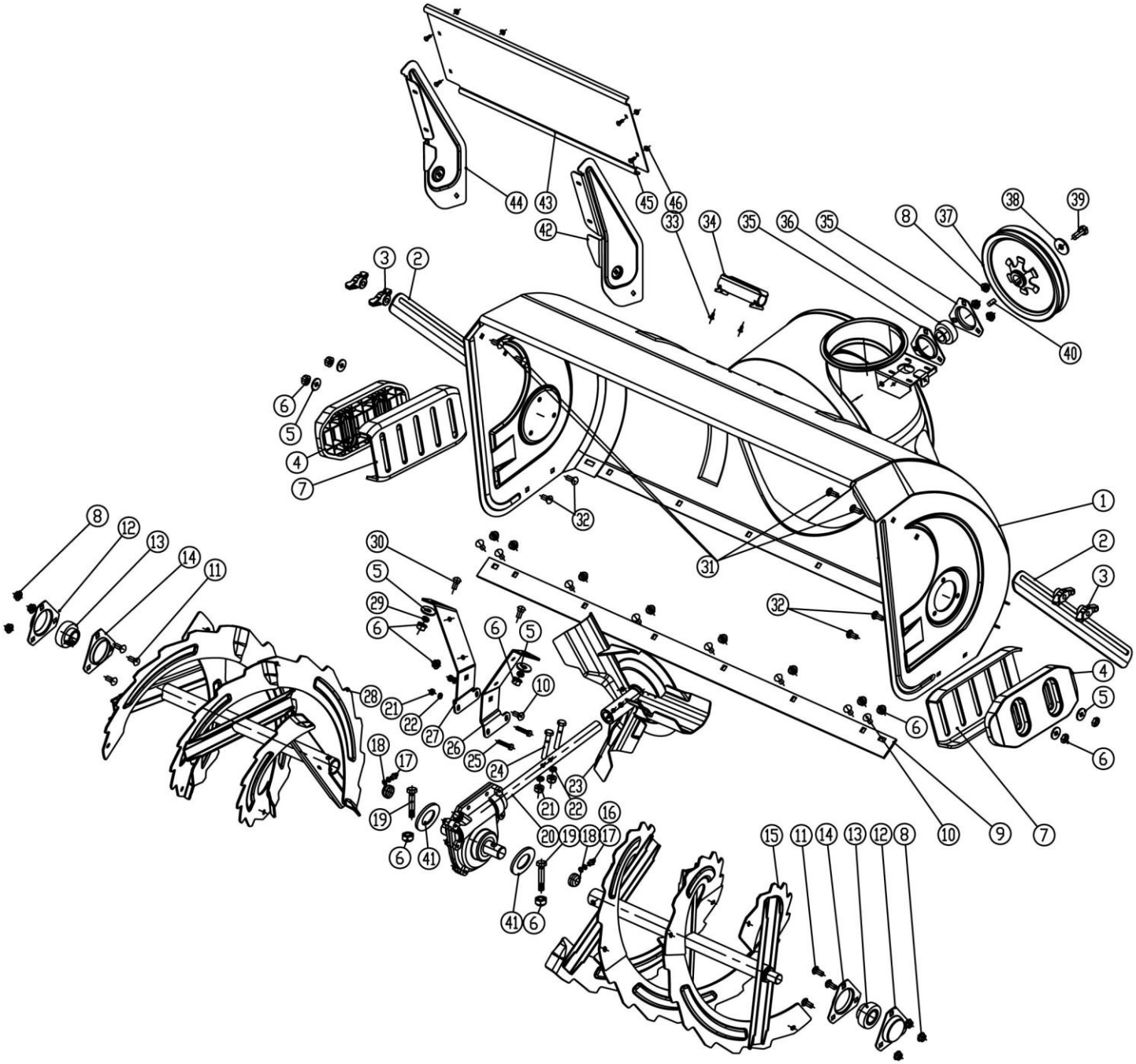

Nr.crt	Denumire produs	Product name	Cod comanda
1	cuva	housing	ps1009-3-01
2	suport cuva	support for housing	ps1009-3-02
3	piulita	plastic nut	ps1009-3-03
4	patina	skid shoe	ps1009-3-04
5	saiba 8	big washer 8	ps1009-3-05
6	piulita m8	jam nut M8	ps1009-3-06

7	patina	skid shoe	ps1009-3-07
8	piulita m8	jam nut M8	ps1009-3-08
9	lama	shave plate,long	ps1009-3-09
10	surub m8x16	bolt M8x16	ps1009-3-10
11	surub m8x18	bolt M8x18	ps1009-3-11
12	carcasa rulment	bearing cover	ps1009-3-12
13	rulment sb205	bearing SB205	ps1009-3-13
14	carcasa rulment	bearing seat	ps1009-3-14
15	freza dreapta	auger,right	ps1009-3-15
16	saiba 8	flat washer 8	ps1009-3-16
17	surub drenaj ulei m8x1	oil cup M8x1	ps1009-3-17
18	gresor	grease cap	ps1009-3-18
19	surub	bolt	ps1009-3-19
20	reductor	worm housing	ps1009-3-20
21	piulita m6	jam nut M6	ps1009-3-21
22	saiba grower 6	spring washer 6	ps1009-3-22
23	turbina	fan	ps1009-3-23
24	surub m6x40	bolt M6x40	ps1009-3-24
25	surub m6x30	bolt M6x30	ps1009-3-25
26	suport dreapta	support right	ps1009-3-26
27	suport stanga	support left	ps1009-3-27
28	freza stranga	auger, left	ps1009-3-28
29	saiba grover 8	spring washer 8	ps1009-3-29
30	surub m8x20	bolt M8x20	ps1009-3-30
31	surub m8x20	bolt M8x20	ps1009-3-31
32	surub m8x25	bolt M8x25	ps1009-3-32
33	surub st4.2x9.5-f	screw ST4.2x9.5-F	ps1009-3-33
34	suport lopatica	shovel support	ps1009-3-34
35	carcasa rulment	bearing seat	ps1009-3-35
36	rulment	bearing	ps1009-3-36
37	fulie	big wheel pulley	ps1009-3-37
38	saiba 10	super washer 10	ps1009-3-38
39	surub m10x25	bolt M10x25	ps1009-3-39
40	pana 6x20	flat key A 6x20	ps1009-3-40
41	saiba	plastic washer	ps1009-3-41
42	suport dreapta prindere panou	higher panel support, right (optional)	ps1009-3-42
43	panou superior	higher panel(optional)	ps1009-3-43
44	suport stanga prindere panou	higher panel support, left (optional)	ps1009-3-44
45	surub m8x16	bolt M8x16 (optional)	ps1009-3-45
46	piulita m8	jam nut M8 (optional)	ps1009-3-46

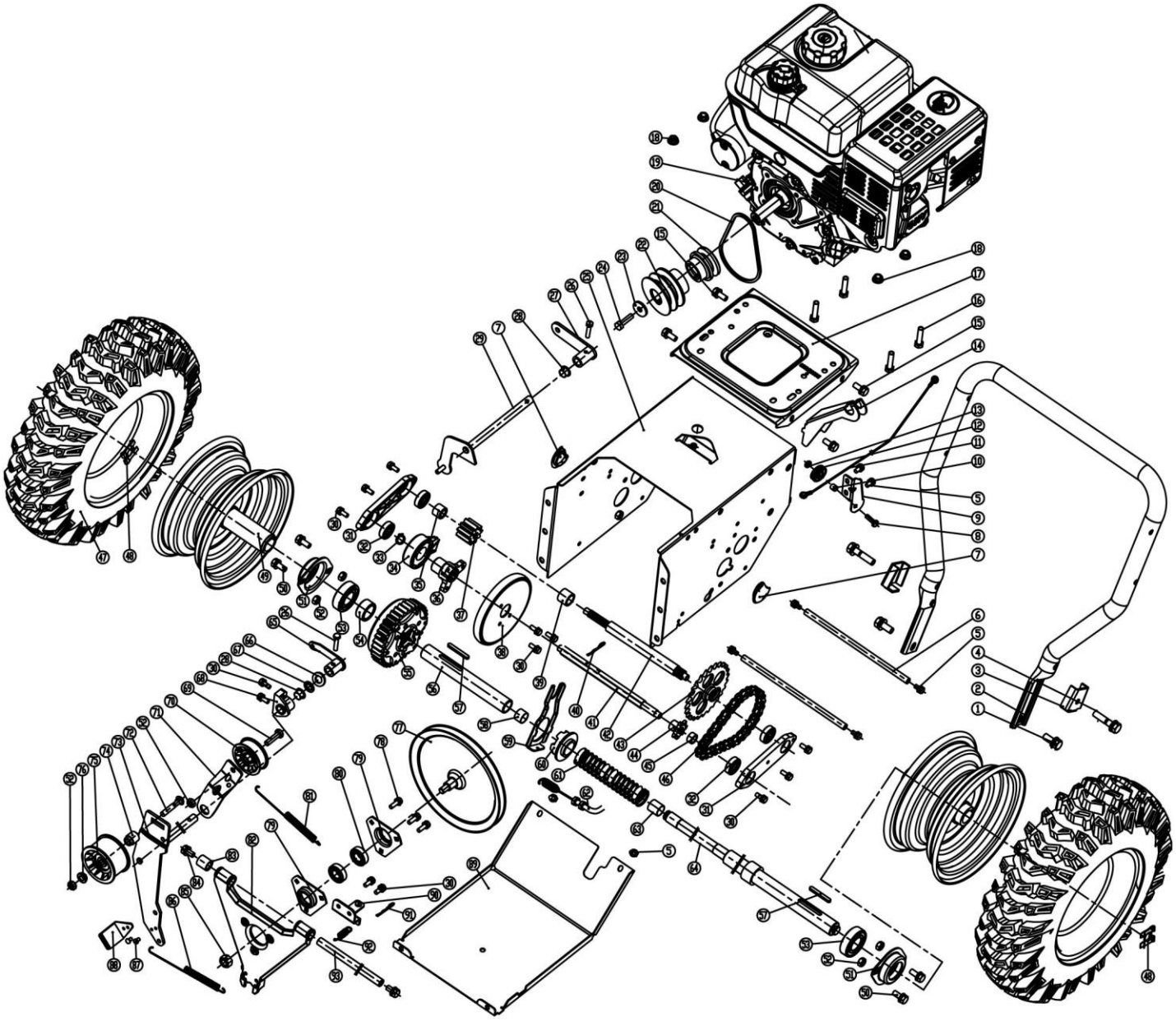

Nr.crt	Denumire produs	Product name	Cod comanda
1	surub m10x25	bolt M10x25	ps1009-4-01
2	suport coarne	handlebar	ps1009-4-02
3	saiba suport	handlebar washer	ps1009-4-03
4	surub m10x45	bolt M10x45	ps1009-4-04
5	surub m6x12	bolt M6x12	ps1009-4-05
6	bara	strut	ps1009-4-06

7	capac 4	cover 4	ps1009-4-07
8	surub m6x20	bolt M6x20	ps1009-4-08
9	scaun fulie	pulley seat	ps1009-4-09
10	manson ax	small shaft sleeve	ps1009-4-10
11	cablu scurt	short wire	ps1009-4-11
12	fulie	pulley	ps1009-4-12
13	piulita m6	jam nut M6	ps1009-4-13
14	surub m8x20	bolt M8X20	ps1009-4-14
15	placa	connecting plate	ps1009-4-15
16	surub m8x40	bolt M8X40	ps1009-4-16
17	suport motor	engine seat	ps1009-4-17
18	piulita m8	jam nut M8	ps1009-4-18
19	motor	engine	ps1009-4-19
20	curea	belt	ps1009-4-20
21	fulie	drive wheel	ps1009-4-21
22	fulie	belt pulley	ps1009-4-22
23	saiba 8	super washer 8	ps1009-4-23
24	surub m8x1x30	bolt M8X1X30	ps1009-4-24
25	carcasa transmisie	transmission box	ps1009-4-25
26	surub m6x20	bolt M6X20	ps1009-4-26
27	conector schimbator	shift connector	ps1009-4-27
28	manson	plastic sleeve	ps1009-4-28
29	ax furca	shift fork	ps1009-4-29
30	surub m6x16	bolt M6X16	ps1009-4-30
31	carcasa rulment	bearing seat	ps1009-4-31
32	rulment 6200	ball bearing 6200	ps1009-4-32
33	zegher 25	circlip 25	ps1009-4-33
34	rulment	shift bearing	ps1009-4-34
35	manson 15x20x15	sleeve15x20x15	ps1009-4-35
36	suport roata transmisie	rubber wheel seat	ps1009-4-36
37	pinion	small gear	ps1009-4-37
38	roata ransmisie	rubber wheel	ps1009-4-38
39	manson 18x23x18	sleeve 18x23x18	ps1009-4-39
40	zegher	circlip	ps1009-4-40
41	ax hexagonal	hexagon shaft	ps1009-4-41
42	ax tranzit	transit shaft	ps1009-4-42
43	pinion	chain wheel	ps1009-4-43
44	pinion	small chain wheel	ps1009-4-44
45	manson 12x15x8	shaft sleeve 12x15x8	ps1009-4-45
46	lant 085-32	chain 085-32	ps1009-4-46
47	anvelopa	tyre	ps1009-4-47

48	siguranta	clip	ps1009-4-48
49	janta	rim	ps1009-4-49
50	surub m6x16	bolt M6x16	ps1009-4-50
51	carcasa rulment	bearing seat	ps1009-4-51
52	piulita m8	lock nut M8	ps1009-4-52
53	rulment 6205	ball bearing 6205	ps1009-4-53
54	manson 25x34x16	shaft sleeve 25x34x16	ps1009-4-54
55	diferential	differential	ps1009-4-55
56	ax scurt	short semi-shaft	ps1009-4-56
57	pana 6x4x45	flat key 6x4x45	ps1009-4-57
58	bucsa bronz 1	bronze sleeve 1	ps1009-4-58
59	placa furca	fork plate	ps1009-4-59
60	cuplaj diferential	semi differential part	ps1009-4-60
61	arc	big spring	ps1009-4-61
62	cablu diferential	differential cable	ps1009-4-62
63	bucsa bronz 2	bronze sleeve 2	ps1009-4-63
64	ax lung	long shaft	ps1009-4-64
65	canector de tensionare	tension connector	ps1009-4-65
66	saiba 12	flat washer 12	ps1009-4-66
67	saiba 12	washer 12	ps1009-4-67
68	fixator	fixing block	ps1009-4-68
69	surub m8x30	bolt M8x30	ps1009-4-69
70	rola intinzator	small tension pulley	ps1009-4-70
71	placa rola intinzator	small tension plate	ps1009-4-71
72	surub m8x45	bolt M8X45	ps1009-4-72
73	placa rola intinzator	big tension combination	ps1009-4-73
74	saiba	washer	ps1009-4-74
75	rola intinzator	big tension pulley	ps1009-4-75
76	saiba	washer	ps1009-4-76
77	fulie	friction disc	ps1009-4-77
78	surub m6x20	bolt M6x20	ps1009-4-78
79	carcasa rulment	bearing seat	ps1009-4-79
80	rulment 6002	ball bearing 6002	ps1009-4-80
81	arc	spring	ps1009-4-81
82	suport fulie	support for friction disc	ps1009-4-82
83	manson 13x20x20	sleeve 13x20x20	ps1009-4-83
84	surub m8x16	bolt M8X16	ps1009-4-84
85	piulita m12	jam nut M12	ps1009-4-85
86	arc	brake spring	ps1009-4-86
87	nit 4x12	rivet 4x12	ps1009-4-87
88	placa blocare	brake block	ps1009-4-88

89	capac transmisie	bottom plate for transmission box	ps1009-4-89
90	placa	position part	ps1009-4-90
91	siguranta 1.5x25	B Pin;¢1.5X25	ps1009-4-91
92	arc	reset spring	ps1009-4-92
93	bara	strut	ps1009-4-93