Documentatie tehnica compresor AirPower 2400

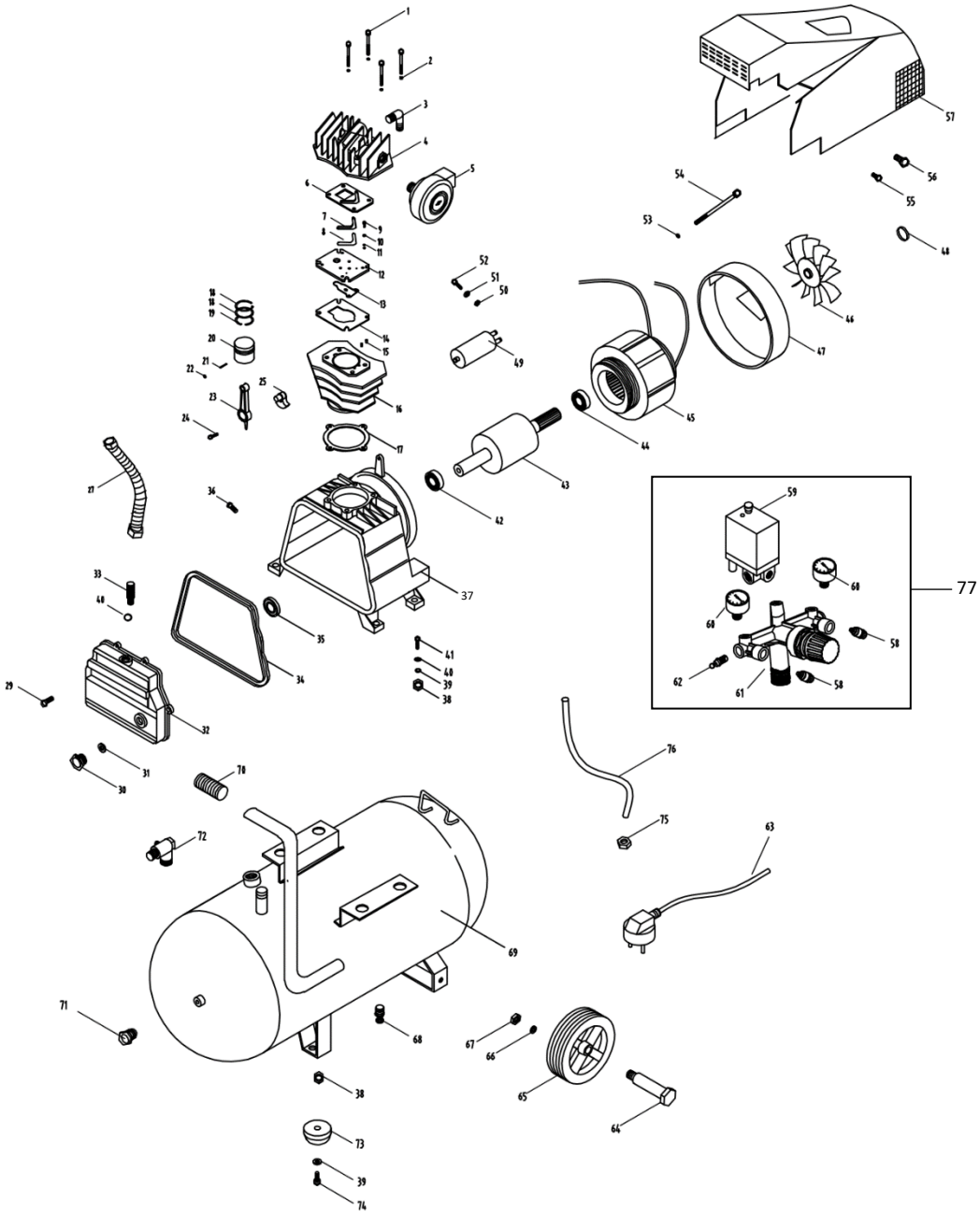

Nr.crt	Denumire produs	Product name	Cod comanda
1	surub chiuloasa 8*105	Cylinder head bolt 8*105	psap2400-1-1
2	saiba	Spring washer	psap2400-1-2
3	cot evacuare	Elbow exhaust G1/2-G3/8	psap2400-1-3

4	capac chiuloasa	Cylinder head	psap2400-1-4
5	filtru aer	Air fliter	psap2400-1-5
6	garnitura capac chiuloasa	Cylinder head gasket	psap2400-1-6
7	valva oprire	valve stop block	psap2400-1-7
8	valva evacuare	Exhaust valve chip	psap2400-1-8
9	bolt M4*8	Bolt M4*8	psap2400-1-9
10	garnitura	Gasket	psap2400-1-10
11	tampon	Plain cushion	psap2400-1-11
12	placa supape	Valve plate	psap2400-1-12
13	cip supapa admisie	Intake valve chip	psap2400-1-13
14	garnitura placa supapa	Valve plate gasket	psap2400-1-14
15	pin ϕ3*6	Straight pinϕ3*6	psap2400-1-15
16	chiuloasa	cylinder 47*66	psap2400-1-16
17	garnitura chiuloasa	Cylinder gasket	psap2400-1-17
18	segment	Gaseous ring ϕ47	psap2400-1-18
19	segment	Oil ring ϕ47	psap2400-1-19
20	piston	Piston ϕ47	psap2400-1-20
21	pin piston	Piston pinϕ12*40	psap2400-1-21
22	siguranta	Holes circlips ϕ12	psap2400-1-22
23	biela	Connecting rod 94	psap2400-1-23
24	surub M8*22	Screw M8*22-left	psap2400-1-24
25	arbore	Crank	psap2400-1-25
27	conducta	Pipe ϕ10*460	psap2400-1-27
29	surub M5*14	Screw M5*14	psap2400-1-29
30	buson ulei	Oil shale M27X1.5	psap2400-1-30
31	garnitura buson ulei	Oil standard ringϕ27	psap2400-1-31
32	capac carter	Crank case cover	psap2400-1-32
33	epurator	Breather M16*1.5	psap2400-1-33
34	garnitura carter	Oil baffle plate	psap2400-1-34
35	etansare	Oil tight ϕ20xϕ40x7	psap2400-1-35
36	surub M12X1.75*16	Purge cock M12X1.75*16	psap2400-1-36
37	carter	crank case	psap2400-1-37
38	piulita M8	Hex nut M8	psap2400-1-38
39	saiba	Plain cushion 8	psap2400-1-39
40	garnitura etansare	Bteather seal	psap2400-1-40
41	surub M8*35	screw M8*35	psap2400-1-41
42	rulment	Fore bearing 6204-2RS	psap2400-1-42
43	rotor	Rotor 130pieces ϕ67*70	psap2400-1-43
44	rulment	Back bearing6202-2RS	psap2400-1-44
45	stator	Stator ϕ135*70铝线	psap2400-1-45

46	ventilator	Fan ϕ155	psap2400-1-46
47	suport spate	Rear support bracket	psap2400-1-47
48	clema	Shadt circlips 14	psap2400-1-48
49	condensator	Capacitance	psap2400-1-49
50	saiba	Plain cushion 3	psap2400-1-50
51	garnitura	Gasket 3	psap2400-1-51
52	surub M3*6	Screw M3*6	psap2400-1-52
53	garnitura	Gasket 5	psap2400-1-53
54	bolt M5*100	Hex bolt M5*100	psap2400-1-54
55	surub	Screw ST4.2*12	psap2400-1-55
56	surub M5*10	Screw M5*10	psap2400-1-56
57	protectie	Plastic cover	psap2400-1-57
58	cuplare	Quick coupling R1/4	psap2400-1-58
59	presostat	Pressure switch	psap2400-1-59
60	manometru	Pressure gauge Y40	psap2400-1-60
61	comutator	Switch bracket	psap2400-1-61
62	valva de siguranta	Safety valve R1/4 8bar	psap2400-1-62
63	cablu alimentare	Power cord 3*1.5-15M	psap2400-1-63
64	bolt ϕ12.5*35	Bolt ϕ12.5*35	psap2400-1-64
65	roata	Wheel 4.5'	psap2400-1-65
66	garnitura	Gasket 10	psap2400-1-66
67	piulita	Hex nutM10	psap2400-1-67
68	valva de scurgere	Deain valve R1/4	psap2400-1-68
69	rezervor 24L	Tank 24L	psap2400-1-69
70	maner	Plastic Handle ϕ20	psap2400-1-70
71	conducta de descarcare	Unloading pipe ϕ6	psap2400-1-71
72	valva de verificare	Check valve	psap2400-1-72
73	picior	Foot	psap2400-1-73
74	bolt M8*20	Hex bolt M8*20	psap2400-1-74
75	surub M10X1	Unloading bolt M10X1	psap2400-1-75
76	conducta de descarcare	Unloading pipe 14cm	psap2400-1-76
77	ansamblu presostat si regulator	pressure switch and regulator assy	psap2400-1-77