Documentatie tehnica motocoasa de umar Atlet 368

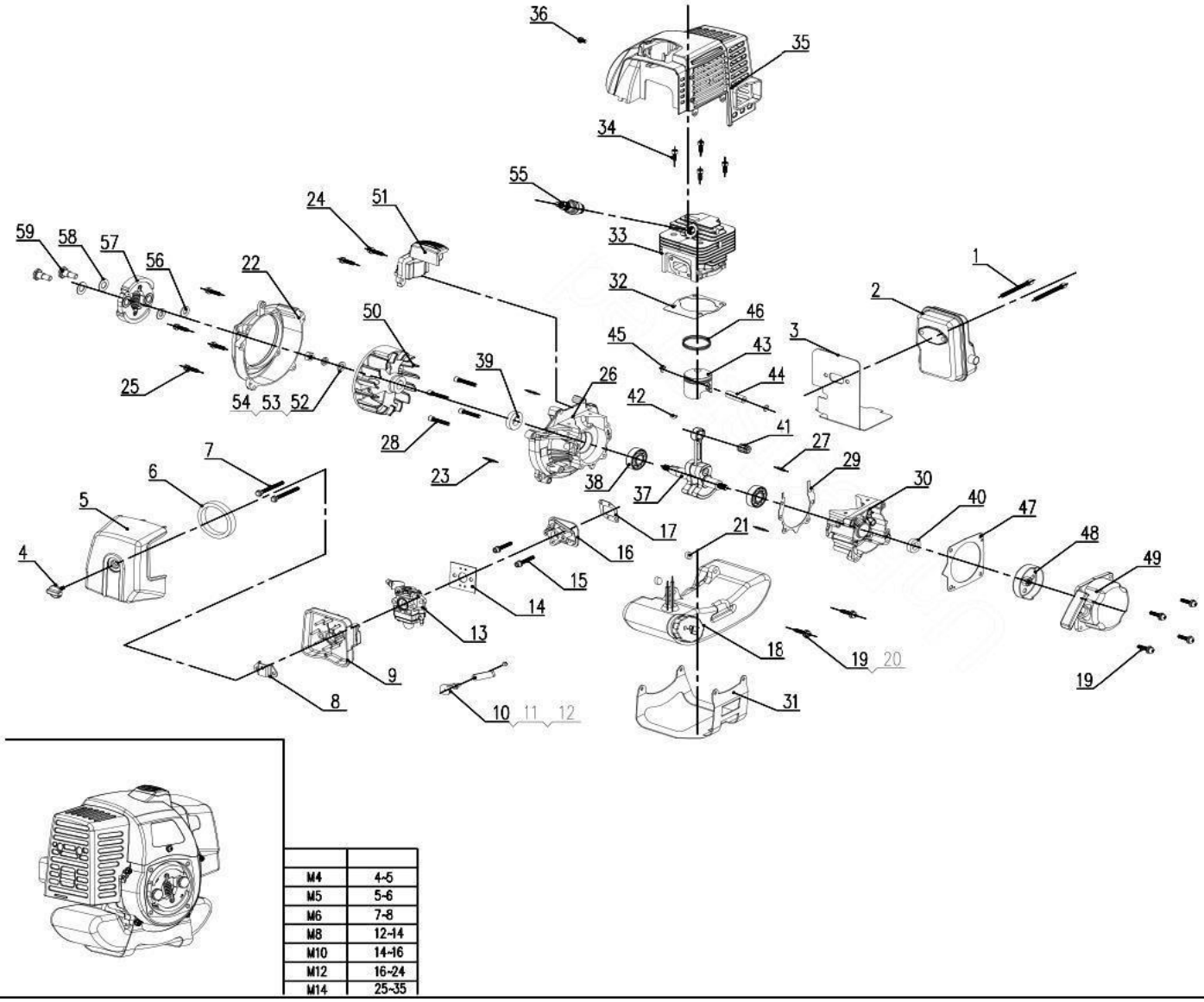

M4	4-5
M5	5-6
M6	7-8
M8	12-14
M10	14-16
M12	16-24
M14	25-35

Nr.crt	Denumire produs	Product name	Cod comanda
1	surub toba esapament	muffler screw	02074590
2	toba esapament	muffler	03150340
3	garnitura	gasket	07070660
4	surub filtru aer	air filter screw	06060050
5	capac filtru aer	air filter cover	06070240
6	filtru aer	air filter	06230090

7	surub	screw	02076640
8	suport soc	shock support	03200310
9	suport filtru aer	air filter holder	06070250
10	clapeta soc	shock flap	06990970
13	carburator	carburettor	04080580
14	garnitura	gasket	07070640
15	surub	screw	02076570
16	placa izolatoare	insulating board	06071070
17	garnitura	gasket	07070607
18	ansamblu rezervor	fuel tank assy	06181200
19	surub	screw	02076540
21	amortizor	damper	04090240
22	carcasa volanta	flywheel housing	ps368-2-22
23	surub	screw	02090060
24	surub	screw	02072080
25	surub	screw	02072110
26	semicarter	crankcase	04260290
27	surub	screw	02090080
28	surub	screw	02074570
29	garnitura samicarter	crankcase gasket	07070620
30	semicarter	crankcase	04260300
31	protectie	protection	ps368-2-31
32	garnitura cilindru	cylinder gasket	07070630
33	cilindru	cylinder	04040140
33a	set motor	engine kit	04040140a
34	surub	screw	02074560
35	capota	hood	ps368-2-35
36	surub	screw	02076500
37	ambielaj	crankshaft	04210320
38	rulment	bearing	02100250
39	simering	seal	02050160
40	simering	seal	02050030
41	rulment bolt	bearing	02101070
42	pana	key	02092030
43	piston	piston	04060640
44	bolt	pin	04060650
45	siguranta bolt	clip	04060660
46	set segmenti	piston ring	04050570
47	protectie	protection	03160150
48	antrenor	trainer	03170100

49	demaror	starter	06250250
50	volanta	flywheel	05010670
51	modul aprindere	ignition coil	05010661
52	saiba	washer	02020340
53	siguranta bolt	clip	02021080
54	piulita	nut	02060130
55	bujie	spark plug	br2t
56	saiba	washer	ps210-2-18
57	ambreiaj	clutch	ps210-2-17
58	saiba	washer	ps210-2-16
59	surub	screw	ps210-2-15

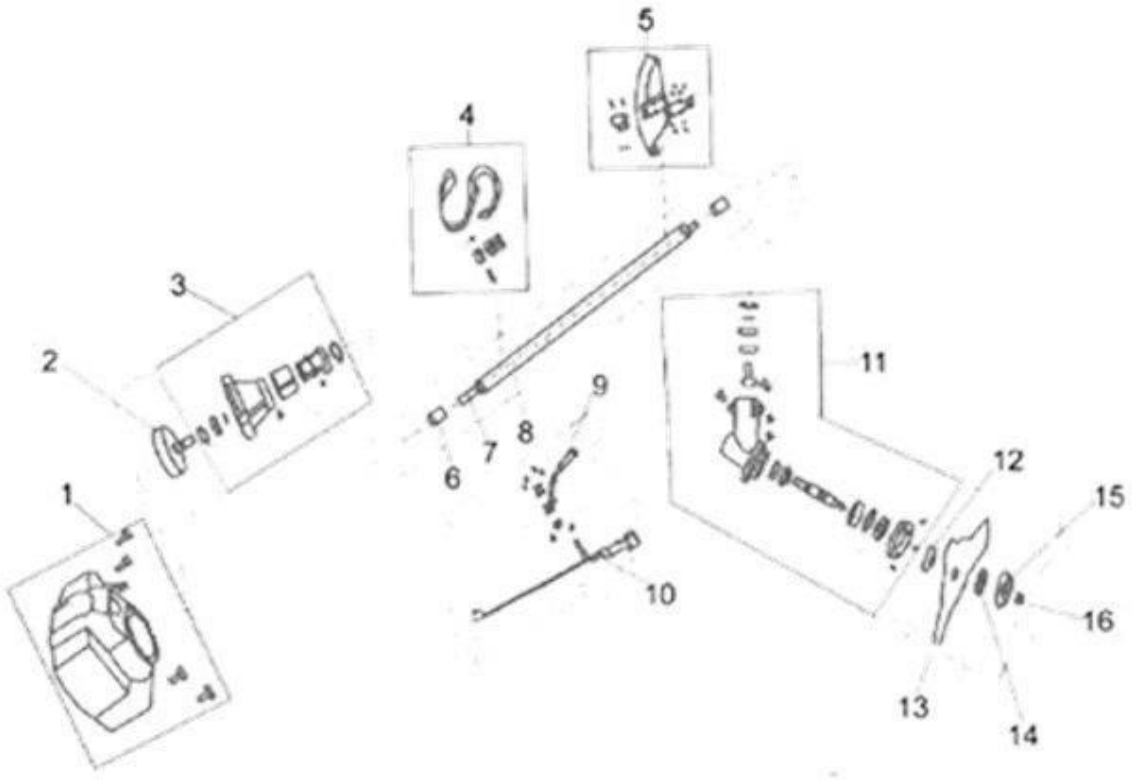

Nr.crt	Denumire produs	Product name	Cod comanda
1	motor	engine	ps368-1-1
2	oala ambreiaj	clutch cup	ps210-1-2
3	cuplaj	coupling	ps368-1-3
4	ham	harness	ps210-1-4
5	aparatoare	shields	ps210-1-5
6	ghidaj	guide	ps368-1-6
7	arbore	axle	ps210-1-7
8	tija	rod	ps368-1-8
9	corn	left handle	ps210-1-9
10	asamblu acceleratie	throttle assembly	ps210-1-10
11	cap reductor	reduction gear	ps368-1-11
12	blocator	lock	ps210-1-12
13	cutit	knife	ps309-1-40
14	saiba	washer	ps210-1-14
15	oala protectie	protection cup	ps210-1-15
16	piulita	nut	ps409s-1-43