RURIS®

Producător motoutilaje

RURIS IMPEX SRL
Adresa: Calea Severinului Bl 317b, 200233, Craiova, Dolj
Telefon: (+40) 351 464 632
Fax: (+40) 351 464 633
Email: office@ruris.ro; vanzari@ruris.ro; service@ruris.ro

RO
EN

CATALOG PIESE DE SCHIMB - *SPARE PARTS CATALOGUE*

MOTOSAPE HOBBY

MOTOSAPE PROF.

MOTOBURGHIE

MOTOCOSITORI

APARATE STROPIT

MOTOPOMPE

MOTOFERASTRAIE

MASINI TUNS GAZON

MOTOCOASE DE UMAR

GENERATOARE

MOTOFOARFECE

RURIS®
power for nature

MOTOSAPA HOBBY Sprint 650B
HOBBY TILLER Sprint 650B

Cod / Code
65022011

Acest document este proprietatea RURIS IMPEX S.R.L. Craiova, si nu poate fi reprodus, utilizat sau facut public fara autorizatia sa scrisa.
This material is proprietary to RURIS IMPEX S.R.L. Craiova, and is not to be reproduced, used or disclosed ecept in accordance with written authorization from RURIS.

© Copyright RURIS IMPEX S.R.L. Craiova

- Ed. iunie 2013 -

RURIS® power for nature PRODUCATOR MOTOUTILAJE RURIS® power for nature

www.ruris.ro

RURIS
power for nature

Imaginile prezentate în această publicaţie sunt numai orientative.
Fabricantul poate efectua modificări ale produsului descris aici din motive tehnice sau comerciale, respectiv, fără a fi obligatorie şi actualizarea imediată a acestei publicaţii.

The pictures presented in this publication are meant as orientation only
The manufactured may carry out modifications to the product described herein out of technical or commercial reasons respectively, without any compulsory and immediate up-dating of this publication.

INTRODUCERE - *FOREWORD*

Va multumim ca ati achizitionat un produs RURIS !

Dorim sa va ajutam sa obtineti cele mai bune rezultate de la noua dvs. Motosapa Sprint 650B si sa rezolvati orice problema tehnica in conditii de securitate maxima. Acest catalog contine informatii privind modalitatea de comanda a pieselor de schimb. Daca aveti probleme tehnice, sau aveti intrebari va rugam sa consultati personalul tehnic al unui service autorizat RURIS. Toate informatiile din acest catalog au la baza ultimele informatii disponibile la data publicarii acestuia.
RURIS isi rezerva dreptul de a face orice modificare in orice moment fara aviz si fara nici o obligatie.
Nici o parte din acest catalog nu poate fi reprodusa fara accordul scris al RURIS.

Thank you for purchasing a RURIS product!

We want to help you to get the best results from your new Hobby Tiller Sprint 650B and to repair it safely. This manual contains information on how to order spare parts. Please read it carefully before operating the product. If a problem should arise, or if you have any questions, consult an authorized RURIS servicing dealer.
All information in this publication is based on the latest product information available at the time of printing. RURIS Ltd. reserves the right to make changes at any time without notice and without incurring any obligation. No part of this publication may be reproduced without written permission of RURIS.

ATENTIE !

Intretinerea incorecta, sau esecul corectarii oricarei probleme inainte de utilizare, poate cauza o functionare defectuasa a produsului care va poate rani serios sau ucide.
Intotdeauna urmati intocmai instructiunile si recomandarile de intretinere - pentru orice problema tehnica adresati-va unui service autorizat RURIS.

WARNING !

Improper maintenance, or failure to correct a problem before operation, can cause a malfunction in which you can be seriously hurt or killed.
Always follow the procedures and maintenance recommendations and for any technical problems consult an authorized RURIS servicing dealer.

CUPRINS - *INDEX*

Recomandari generale 5
Ansamblu general..... 6
Ambreiaj ……..... 7
Ansamblu reductor..... 9
Grup freze …...……..... 11
Suport coarne + Aripi..... 13
Ghidare si comenzi 15
Accesorii ……..... 17
Motor …….. 19

General recommendations 5
General Overview..... 6
Clutch …..……..... 7
Reducer Assembly…..... 9
Soil-mills group ……..... 11
Horns support + Wings..... 13
Drive and Commands..... 15
Accessories ……..……..... 17
Engine ……..… 19

Cum comandati piesele de schimb

Cand comandati o piesa de schimb, specificati numarul piesei, numele acesteia, cantitatea necesara, si deasemenea specificati codul si seria masinii.
Acest Catalog piese de schimb descrie atât piesele standard cât si echipamentele si piesele optionale. Pentru a comanda o piesa, vã rugãm sa contactati cel mai apropiat dealer RURIS.

How to order Spare parts

When ordering a spare part, specify the part number, part name, quantity required, and olso specify your machine model code and machine serial number.
This Parts Book describes not only standard items but also optional equipment and attachments. To order a part, please contact your nearest RURIS distributor.

Desene si tabele piese de schimb

Când deschideti acest Catalog, veti gasi o serie de ilustratii tehnice pentru fiecare grup de piese. Fiecare piesa din grup are indicat un numar index unic. In pagina urmatoare, componentele grupului sunt listate in ordinea numarului index din desen.
Codul si denumirea piesei cât si cantitatea necesara pentru formularea comenzii este specificata pentru fiecare piesa individual.

In fiecare ilustratie tehnicã veti gasi urmatoarele informatii (vezi Fig.1):

A. Desen in explozie cu numarul de ref. al pieselor;
B. Denumirea grupului;
C. Codul grupului;
D. Cod de identificare plansa / versiune utilaj;
E. Data si nr. reviziei;
F. Codul utilajului;
G. Simbolul grafic al grupului;
H. Numarul de referinta al piesei;
I. Trimitere catre alta plansa;
J. Linie cu informatii pentru o piesa;
K. Ref. este numarul de referinta din desen;
L. Numele piesei;
M. Cantitatea recomandata;
N. Cod intern specific producatorului;
O. Codul modular al piesei;

Drawings and Spare parts tables

When you open this Parts Book, you will find an illustration for any spare parts group. Each individual part in the group is given an index number. On the next page, the component parts of the group are listed in the order of the index numbers shown on the illustration page. The part number, part name, and quantity required are given for each part.

On any illustration page you must find (see Fig.1):

A. *Exploded drawing with index number of parts;*
B. *Group denomination;*
C. *Group index number;*
D. *Identification of drawing / machine version;*
E. *Edition date and no. ;*
F. *Machine model code;*
G. *Group icon;*
H. *Reference number of parts;*
I. *Reference to another illustration page;*
J. *Informations line for one spare part;*
K. *Pos. is the reference number of part;*
L. *Part name;*
M. *Quantity required;*
N. *Producer internal code;*
O. *Part modular key code.*

CODUL MODULAR al pieselor de schimb

MODULAR KEY CODE of spare parts

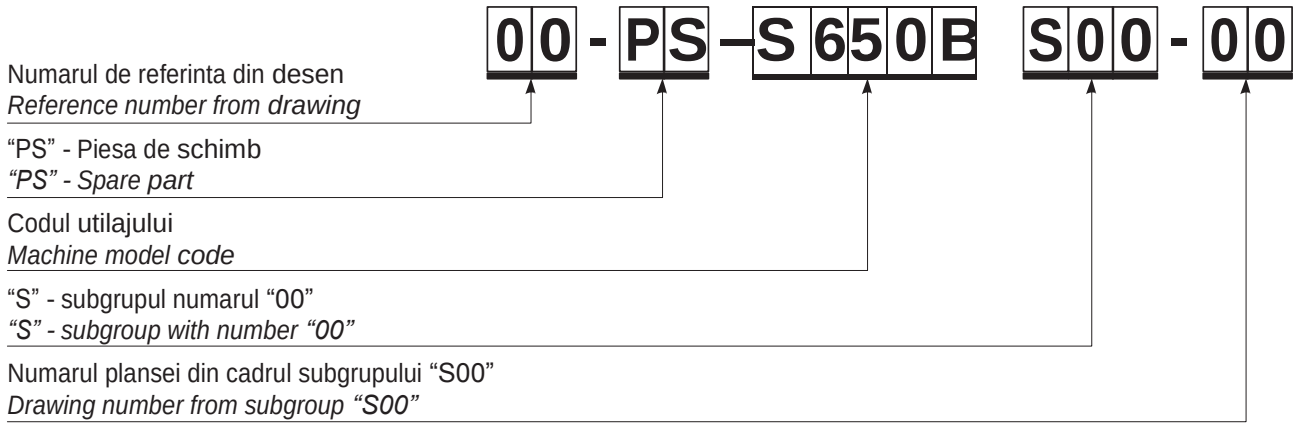

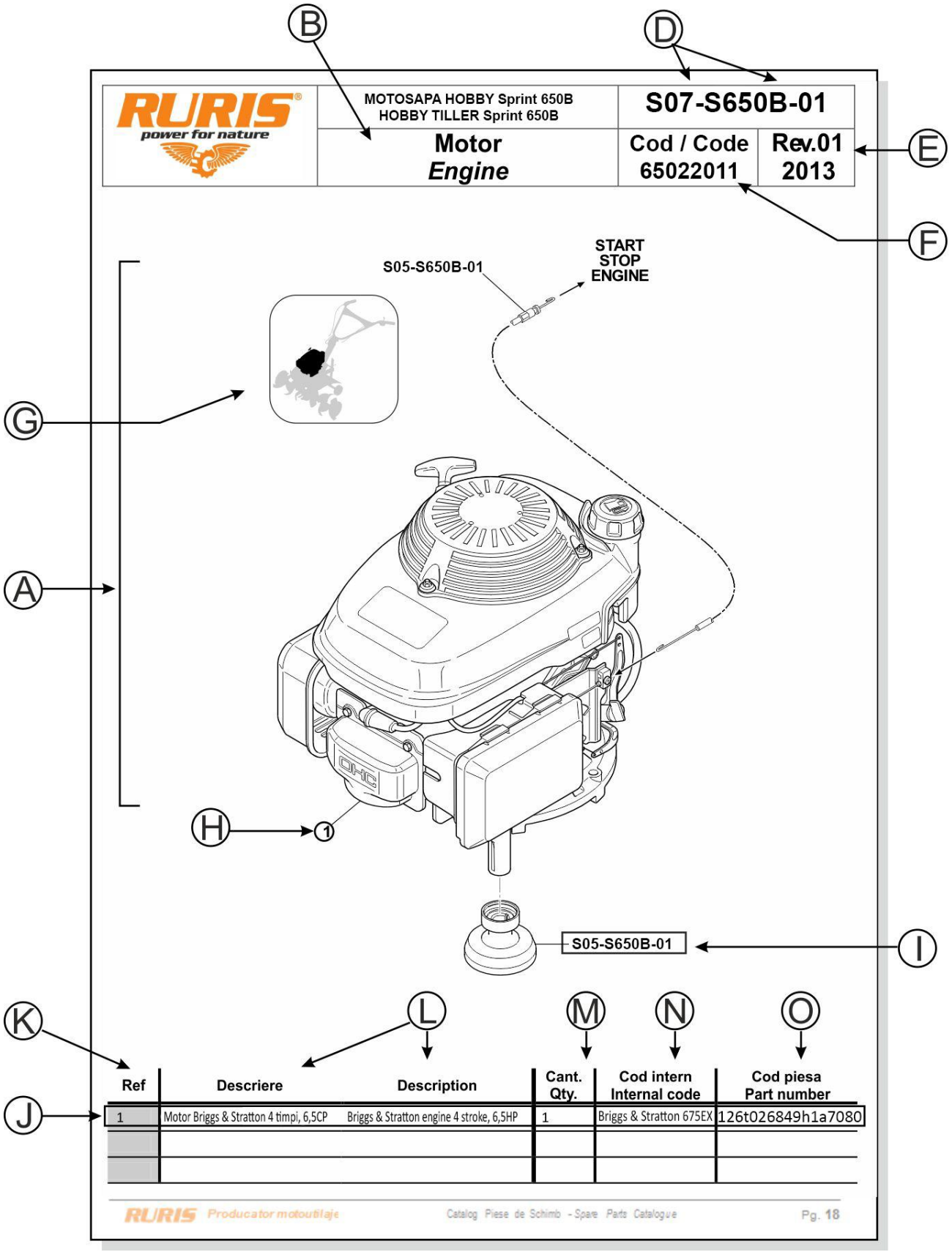
B
D
RURIS
power for nature
MOTOSAPA HOBBY Sprint 650B
HOBBY TILLER Sprint 650B
S07-S650B-01
Motor
Engine
Cod / Code
65022011
Rev.01
2013
E
F
START
STOP
ENGINE
S05-S650B-01
G
A
H
1
S05-S650B-01
I
K
L
M
N
O
J
Ref
Descriere
Description
Cant.
Qty.
Cod intern
Internal code
Cod piesa
Part number
1
Motor Briggs & Stratton 4 timpi, 6,5CP
Briggs & Stratton engine 4 stroke, 6,5HP
1
Briggs & Stratton 675EX
126t026849h1a7080
RURIS Producator motoutilaje
Catalog Piese de Schimb - Spare Parts Catalogue
Pg. 18

Fig.1

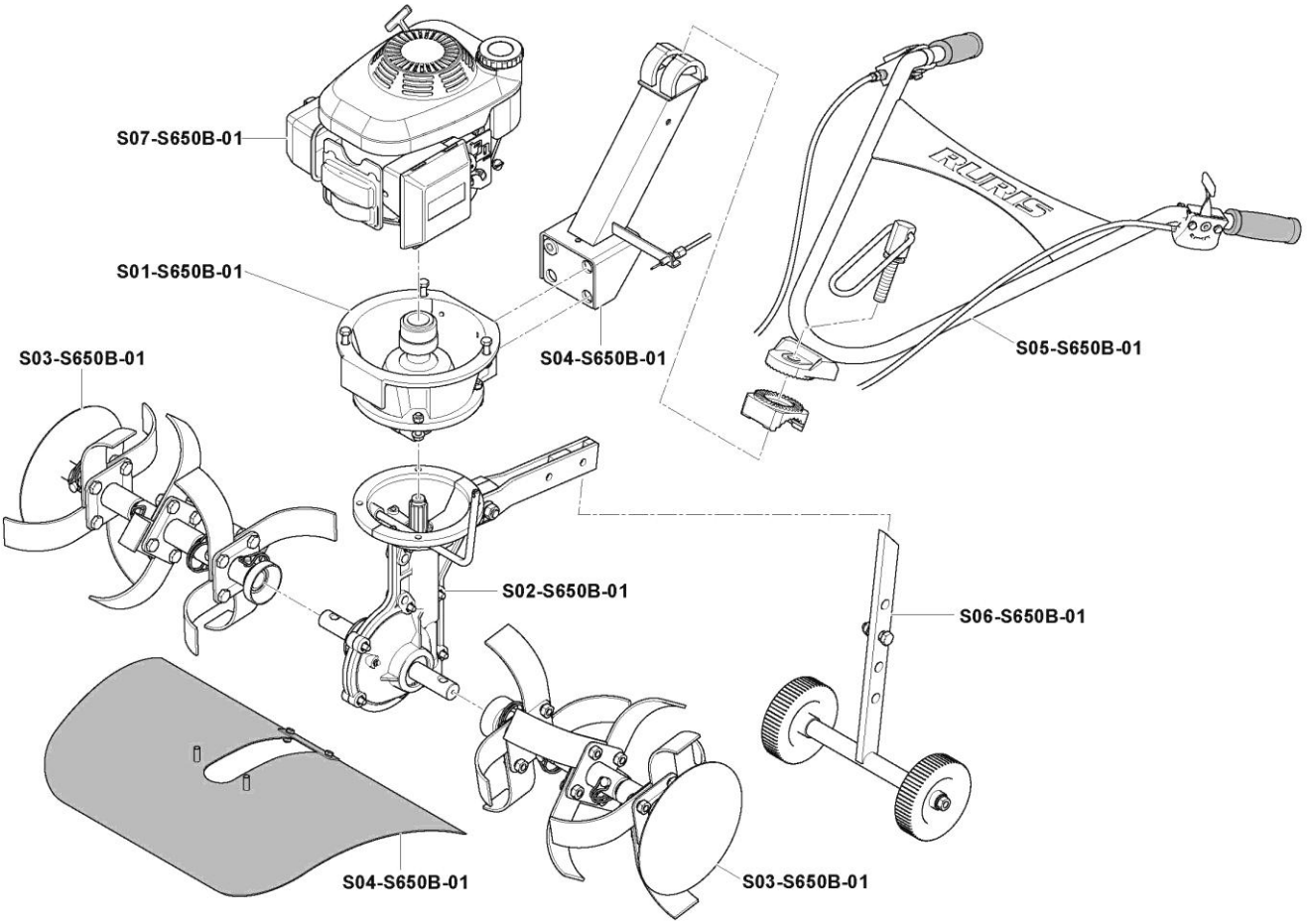

Ref	Descriere	Description	Cant. Qty.	Cod piesa Part number
1	Ambreiaj	*Clutch*	1	S01-S650B-01
2	Ansamblu Reductor	*Reducer assembly*	1	S02-S650B-01
3	Grup freze	*Soil-mills group*	1	S03-S650B-01
4	Suport coarne + Aripi	*Horns support + Protective wings*	1	S04-S650B-01
5	Ghidare si Comenzi	*Drive and Commands*	1	S05-S650B-01
6	Accesorii	*Accessories*	1	S06-S650B-01
7	Motorizare	*Engine*	1	S07-S650B-01

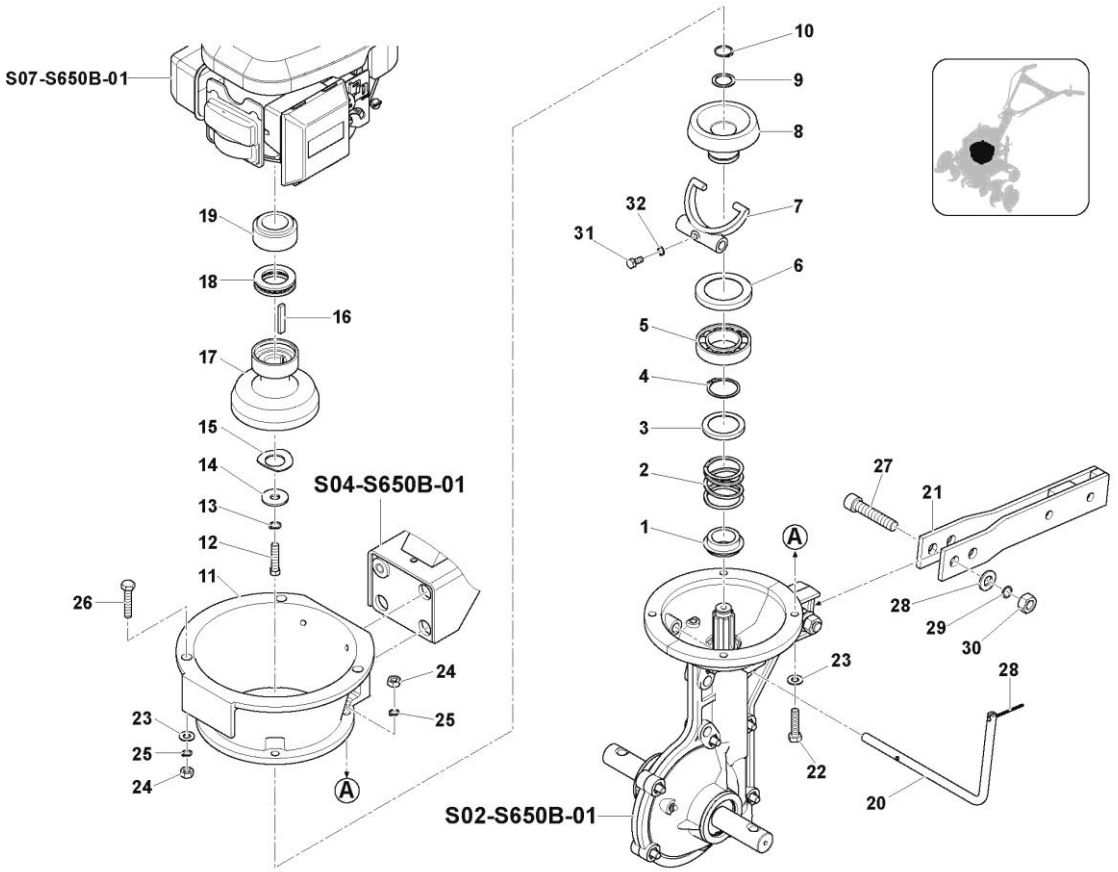

Ref	Descriere	Description	Cant. Qty.	Cod intern Internal code	Cod piesa Part number
1	Bucsa arc	Spring bush	1	PSS550-74	01-PS-S650B-S01-1
2	Arc	Spring	1	PSS550-29A	02-PS-S650B-S01-1
3	Capac arc	Spring cap	1	PSS550-75	03-PS-S650B-S01-1
4	Zegher arbore Ø 35	External retaining ring Ø 35	1	PSS550-76	04-PS-S650B-S01-1
5	Rulment 6007-2RS	Bearing 6007-2RS	1	PSS550-14A	05-PS-S650B-S01-1
6	Caseta rulment	Bearing housing	1	PSS550-14	06-PS-S650B-S01-1
7	Furca ambreiaj	Clutch fork	1	PSS550-28	07-PS-S650B-S01-1
8	Con frictiune	Friction cone	1	PSS550-15a	08-PS-S650B-S01-1
9	Saiba 26x19x1	Washer 26x19x1	1	PSS550-16	09-PS-S650B-S01-1
10	Zegher arbore Ø 18	External retaining ring Ø 18	1	PSS550-17	10-PS-S650B-S01-1

Ref	Descriere	Description	Cant. Qty.	Cod intern Internal code	Cod piesa Part number
11	Carcasa intermediara	Intermediate housing	1	PSS550-47	11-PS-S650B-S01-1
12	Surub 3/8 UNF	Bolt 3/8 UNF	1	PSS550-18	12-PS-S650B-S01-1
13	Saiba Grower N10	Spring washer N10	1	PSS550-19	13-PS-S650B-S01-1
14	Saiba plata 10x30	Flat washer 10x30	1	PSS550-20	14-PS-S650B-S01-1
15	Saiba de reglaj	Adjustment washer	1	PSS550-21	15-PS-S650B-S01-1
16	Pana paralela	Paralel key	1	PSS550-23	16-PS-S650B-S01-1
17	Carcasa ambreiaj as.	Clutch housing assembly	1	PSS550-24	17-PS-S650B-S01-1
18	Rulment 51106	Bearing 51106	1	PSS550-25	18-PS-S650B-S01-1
19	Bucsa distantier	Spacer bush	1	PSS550-26	19-PS-S650B-S01-1
20	Ax cuplare ambreiaj	Clutch lever	1	PSS550-27	20-PS-S650B-S01-1
21	Suport	Support	1	PSS550-55	21-PS-S650B-S01-1
22	Surub imbus M8x35	Imbus head bolt M8x35	4	PSS550-44	22-PS-S650B-S01-1
23	Saiba plata A8	Flat washer A8	7	PSS550-49	23-PS-S650B-S01-1
24	Piulita M8	Nut M8	7	PSS550-51	24-PS-S650B-S01-1
25	Saiba Grower N8	Spring washer N8	7	PSS550-50	25-PS-S650B-S01-1
26	Surub M8x45	Bolt M8x45	3	PSS550-77	26-PS-S650B-S01-1
27	Surub imbus M12x60	Imbus head bolt M12x60	2	PSS550-56	27-PS-S650B-S01-1
28	Saiba plata A12	Flat washer A12	2	PSS550-78	28-PS-S650B-S01-1
29	Saiba Grower N12	Spring washer N12	2	PSS550-57	29-PS-S650B-S01-1
30	Piulita M12	Nut M12	2	PSS550-58	30-PS-S650B-S01-1
31	Surub M6x15	Bolt M6x15	1	PSS550-30	31-PS-S650B-S01-1
32	Saiba Grower N6	Spring washer N6	1	PSS550-79	32-PS-S650B-S01-1

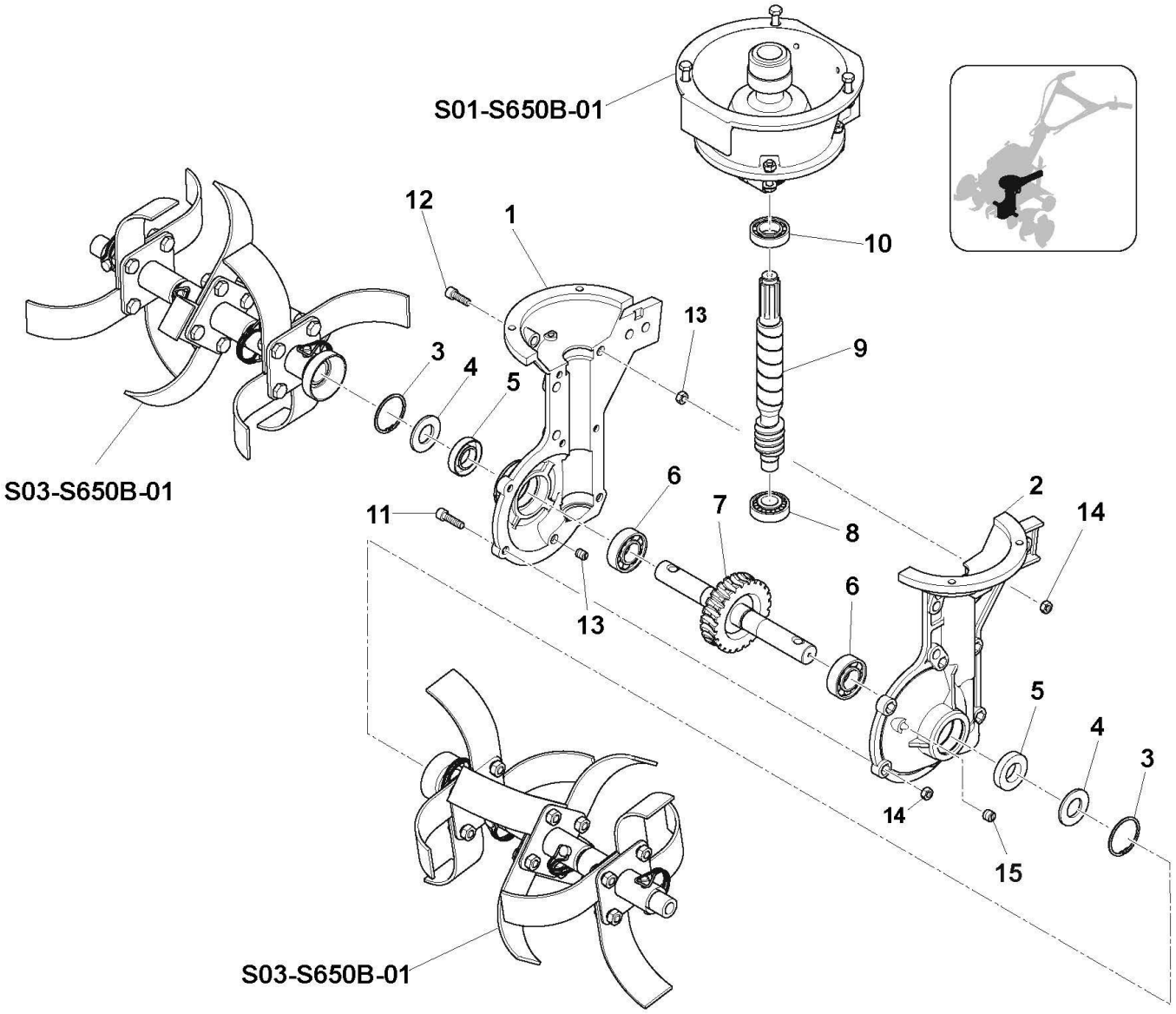
S01-S650B-01
12
1
10
13
9
3
4
5
S03-S650B-01
6
2
14
11
7
8
6
13
5
4
3
14
15
S03-S650B-01

Ref	Descriere	Description	Cant. Qty.	Cod intern Internal code	Cod piesa Part number
1	Semicarter dreapta	Half-case I	1	PSS550-01	01-PS-S650B-S02-1
2	Semicarter stanga	Half-case II	1	PSS550-02	02-PS-S650B-S02-1
3	Zegher alezaj Ø 47	Internal retaining ring Ø 47	2	PSS550-71	03-PS-S650B-S02-
4	Saiba protectie	Protective washer	2	PSS550-04	04-PS-S650B-S02-1
5	Simering 25x47x10	Sealing ring 25x47x10	2	PSS550-05	05-PS-S650B-S02-1
6	Rulment 6205-2RS	Bearing 6205-2RS	2	PSS550-06	06-PS-S650B-S02-1
7	Roata melcata	Worm wheel	1	PSS550-03	07-PS-S650B-S02-1
8	Rulment 30204A	Bearing 30204A	1	PSS550-11	08-PS-S650B-S02-1
9	Ax melcat	Worm shaft	1	PSS550-12	09-PS-S650B-S02-1
10	Rulment 6005-2RS	Bearing 6005-2RS	1	PSS550-13	10-PS-S650B-S02-1
11	Surub imbus M8x25	Imbus head bolt M8x25	6	PSS550-08	11-PS-S650B-S02-1
12	Surub imbus M8x35	Imbus head bolt M8x35	2	PSS550-44	22-PS-S650B-S01-1
13	Bucsa ghidare	Guiding bush	2	PSS550-72	13-PS-S650B-S02-1
14	Piulita M8	Nut M8	8	PSS550-10	24-PS-S650B-S01-1
15	Surub golire	Drain bolt	1	PSS550-73	15-PS-S650B-S02-1

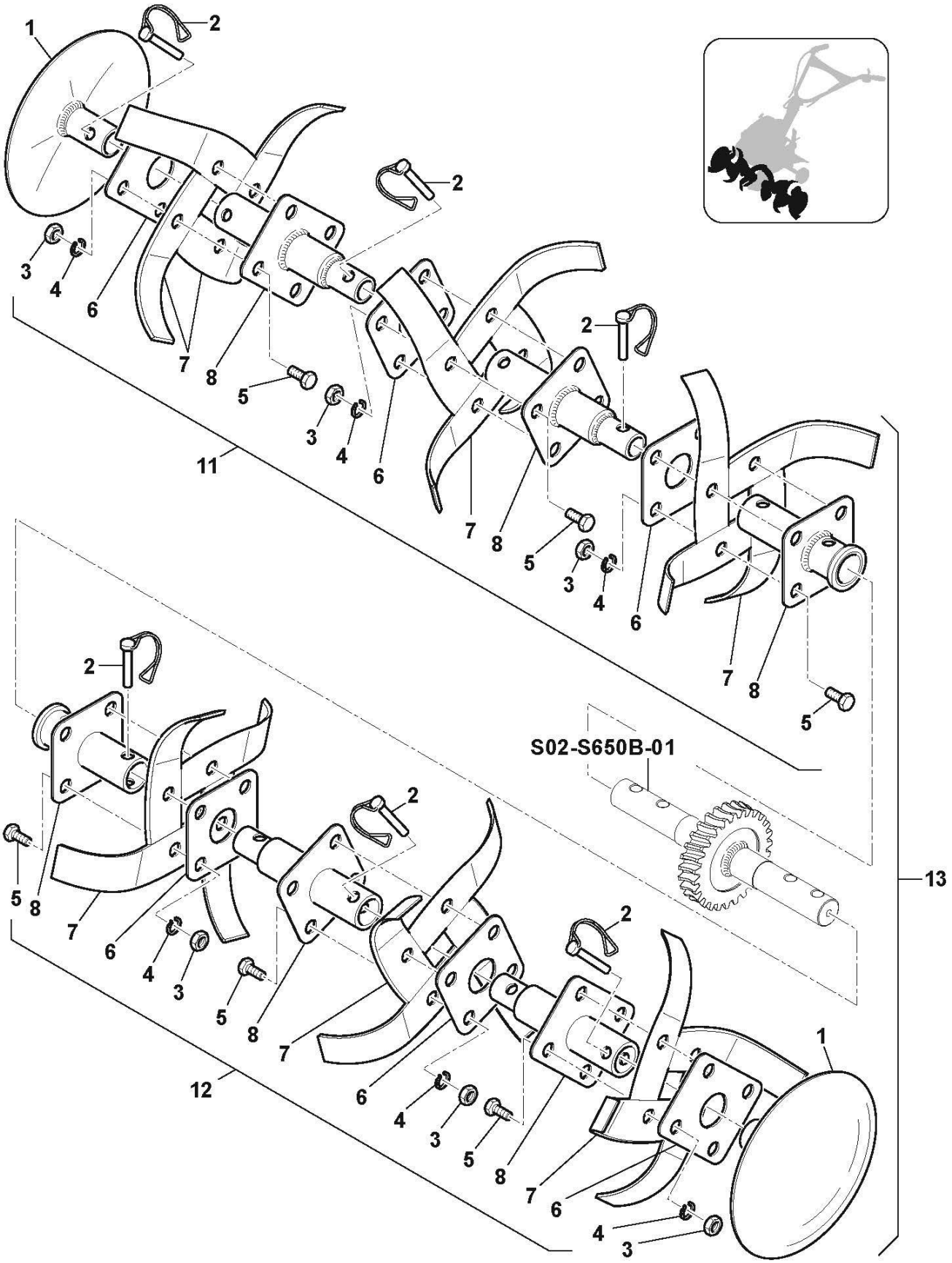
1
2
3
4
5
6
7
8
11
12
13
S02-S650B-01

RURIS power for nature	MOTOSAPA HOBBY Sprint 650B HOBBY TILLER Sprint 650B	S03-S650B-01	
	Grup Freze ***Soil-mills group***	**Cod / *Code*** **65022011**	**Rev.01** **2013**

Ref	Descriere	Description	Cant. Qty.	Cod intern Internal code	Cod piesa Part number
1	Disc protectie	Side protective disk	2	PSS550-64	01-PS-S650B-S03-1
2	Pin blocaj	Lock pin	8	PSS550-80	02-PS-S650B-S03-1
3	Piulita M10	Nut M10	24	PSS550-69	03-PS-S650B-S03-
4	Saiba Grower 10	Grower washer 10	24	PSS550-70	13-PS-S650B-S01-1
5	Surub M10x25	Bolt M10x25	24	PSS550-81	05-PS-S650B-S03-1
6	Flansa	Flange	6	PSS550-82	06-PS-S650B-S03-1
7	Cutit dreapta	Cutting arm-right	12	PSS550-61	07-PS-S650B-S03-1
8	Cutit stanga	Cutting arm-left	12	PSS550-62	08-PS-S650B-S03-1
9	Manicot fara guler	Support	4	PSS550-63	09-PS-S650B-S03-1
10	Manicot cu guler	Support	2	PSS550-63A	10-PS-S650B-S03-1
11	**Ans. freze stanga**	**Left assembly**	**1**	PSS550-83	11-PS-S650B-S03-1
12	**Ans. freze dreapta**	**Right assembly**	**1**	PSS550-84	12-PS-S650B-S03-1
13	**Grup Freza**	**Group Soil-mills**	**1**	PSS550-85	13-PS-S650B-S03-1

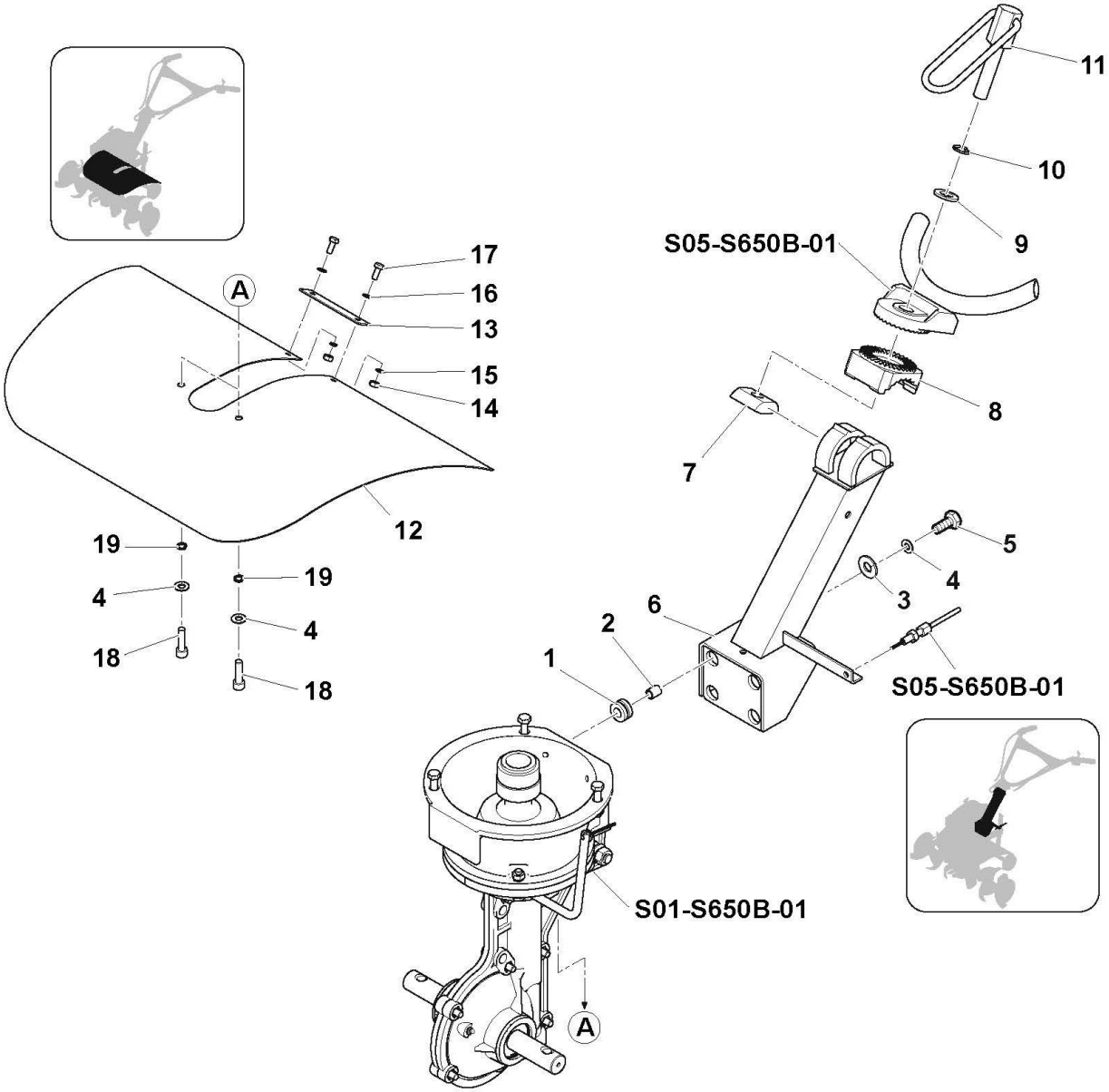
11
10
9
S05-S650B-01
8
7
5
4
3
6
2
1
S05-S650B-01
S01-S650B-01
A
17
16
13
15
14
12
19
4
18
19
4
18
A

RURIS power for nature	MOTOSAPA HOBBY Sprint 650B HOBBY TILLER Sprint 650B	S04-S650B-01	
	Suport coarne + Aripi ***Horns support +Wings***	**Cod / *Code*** **65022011**	**Rev.01** **2013**

Ref	Descriere	Description	Cant. Qty.	Cod intern Internal code	Cod piesa Part number
1	Amortizor	Shock-Absorber	4	PSS550-45	01-PS-S650B-S04-1
2	Bucsa distantier	Spacer bush	4	PSS550-46	02-PS-S650B-S04-1
3	Saiba 3x8,5x30	Washer 3x8,5x30	4	PSS550-43	03-PS-S650B-S04-1
4	Saiba Grower N8	Spring washer N8	6	PSS550-50	25-PS-S650B-S01-1
5	Surub imbus M8x35	Imbus head bolt M8x35	4	PSS550-44	12-PS-S650B-S02-1
6	Suport coarne	Horns support	1	PSS550-42	06-PS-S650B-S04-1
7	Piulita speciala	Special nut	1	PSS550-41	07-PS-S650B-S04-1
8	Piesa cuplare	Coupling part	1	PSS550-40	08-PS-S650B-S04-1
9	Saiba plata A16	Flat washer A16	1	PSS550-39	09-PS-S650B-S04-1
10	Saiba Grower N16	Spring washer N16	1	PSS550-38	10-PS-S650B-S04-1
11	Surub special M16	Special bolt M16	1	PSS550-37	11-PS-S650B-S04-1
12	Aripa de protectie	Protective wing	1	PSS550-53	12-PS-S650B-S04-1
13	Placuta	Plate	1	PSS550-86	13-PS-S650B-S04-1
14	Piulita M6	Nut M6	2	PSS550-87	14-PS-S650B-S04-1
15	Saiba Grower N6	Spring washer N6	2	PSS550-79	32-PS-S650B-S01-1
16	Saiba plata A6	Flat washer A6	4	PSS550-80	16-PS-S650B-S04-1
17	Surub M6x15	Bolt M6x15	2	PSS550-30	31-PS-S650B-S01-1
18	Surub imbus M8x30	Imbus head bolt M8x30	2	PSS550-81	18-PS-S650B-S04-1
19	Saiba plata A3x8,5x30	Flat washer A3x8,5x30	2	PSS550-43	23-PS-S650B-S01-1

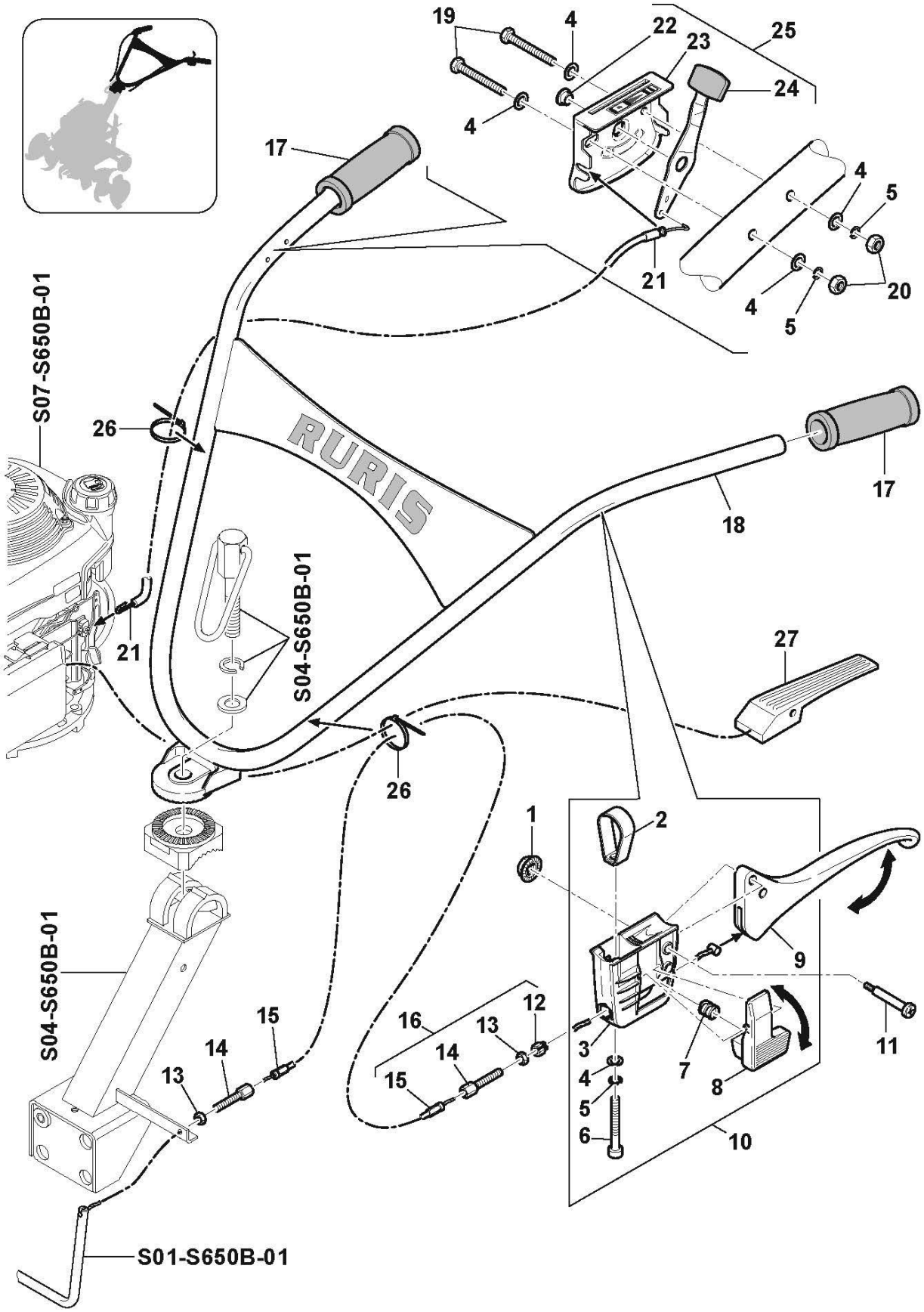

19
4
22
23
25
24
4
17
4
5
21
20
4
5
S07-S650B-01
26
RURIS
17
18
S04-S650B-01
21
27
26
1
2
9
S04-S650B-01
15
14
13
16
13
12
14
15
3
4
5
6
7
8
11
10
S01-S650B-01

Ref	Descriere	Description	Cant. Qty.	Cod intern Internal code	Cod piesa Part number
1	Piulita cu flansa auto-blocanta M5	Serrated fange nut M5	1	PSS550-82	01-PS-S650B-S05-1
2	Colier fxare	Fixing ring	1	PSS550-83	02-PS-S650B-S05-1
3	Corp maneta	Lever body	1	PSS550-84	03-PS-S650B-S05-1
4	Saiba plata A5	Flat washer A5	5	PSS550-85	04-PS-S650B-S05-1
5	Saiba Grower N5	Spring washer N5	3	PSS550-101	05-PS-S650B-S05-1
6	Surub imbus M5x35	Imbus head bolt M5x35	1	PSS550-102	06-PS-S650B-S05-1
7	Arc	Spring	1	PSS550-88	07-PS-S650B-S05-1
8	Buton blocaj pozitie	Position lock button	1	PSS550-89	08-PS-S650B-S05-1
9	Maneta	Lever	1	PSS550-90	09-PS-S650B-S05-1
10	**Grup maneta cuplare ambreiaj**	**Group lever clutch coupling**	**1**	PSS550-35	10-PS-S650B-S05-1
11	Surub special M5	Special bolt M5	1	PSS550-91	11-PS-S650B-S05-1
12	Piulita Speciala M8	Special Nut M8	1		11-PS-KR117/200-S05-2
13	Piulita M8	Nut M8	2	PSS550-51	24-PS-S650B-S01-1
14	Reductie M8	Reduction M8	2	PSS550-92	14-PS-S650B-S05-1
15	Cablu cuplaj ambreiaj	Cable coupling clutch	1	PSS550-93	15-PS-S650B-S05-1
16	**Grup cablu actionare ambreiaj**	**Group cable coupling clutch**	**1**	PSS550-36	16-PS-S650B-S05-1
17	Maner	Grip handle	2	PSS550-67	17-PS-S650B-S05-1
18	Coarne sudate	Horns welded	1	PSS550-34	18-PS-S650B-S05-1
19	Surub M5x45	Bolt M5x45	2	PSS550-31	19-PS-S650B-S05-1
20	Piulita M5	Nut M5	2	PSS550-32	20-PS-S650B-S05-1
21	Cablu acceleratie	Acceleration cable	1	PSS550-33	21-PS-S650B-S05-1
22	Bucsa	Bush	1	PSS550-94	22-PS-S650B-S05-1
23	Suport maneta	Lever support	1	PSS550-95	23-PS-S650B-S05-1
24	Maneta	Lever	1	PSS550-96	24-PS-S650B-S05-1
25	**Grup maneta acceleratie motor**	**Group engine acceleration command**	**1**	PSS550-32	25-PS-S650B-S05-1
26	Colier fixare	Fixing ring	2	PSS550-97	26-PS-S650B-S05-1
27	Maneta MOTOR STOP	ENGINE STOP lever	1	PSS550-98	27-PS-S650B-S05-1

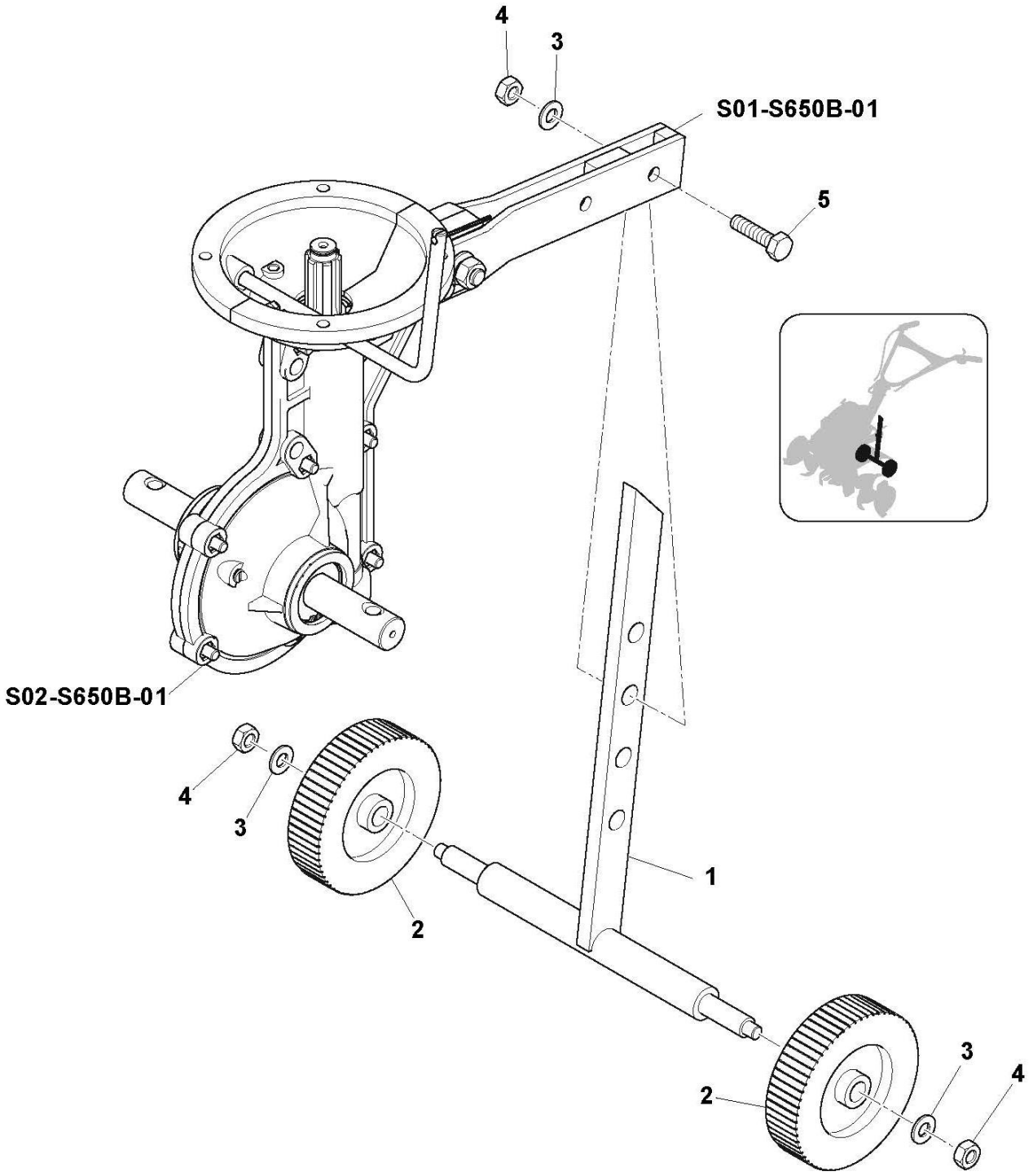
4
3
S01-S650B-01
5
S02-S650B-01
4
3
1
2
3
4
2

Ref	Descriere	Description	Cant. Qty.	Cod intern Internal code	Cod piesa Part number
1	Cadru carucior	Cart frame	1	PSS550-54	01-PS-S650B-S06-1
2	Roti	Wheels	2	PSS550-99	02-PS-S650B-S06-1
3	Saiba plata A10	Flat washer A10	3	PSS550-100	03-PS-S650B-S06-1
4	Piulita M10	Nut M10	3	PSS550-60	03-PS-S650B-S03-1
5	Surub M10x40	Bolt M10x40	1	PSS550-59	05-PS-S650B-S06-1

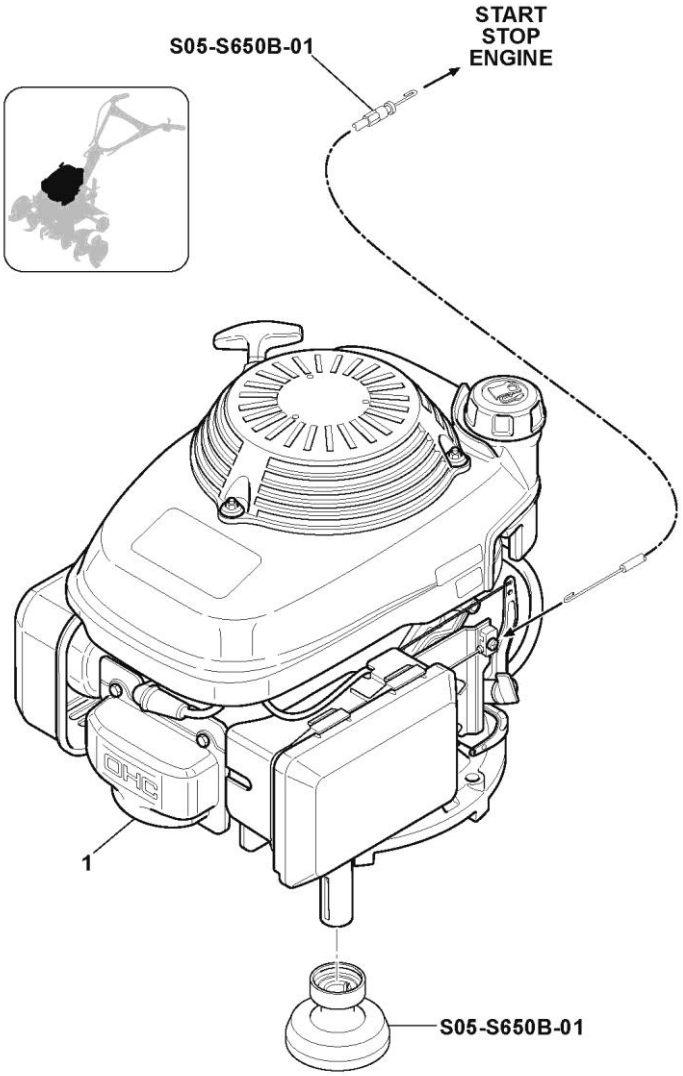

Ref	Descriere	Description	Cant. Qty.	Cod intern Internal code	Cod piesa Part number
1	Motor Briggs & Stratton 4 timpi 6,5CP	Briggs & Stratton 4 stroke engine 6,5 HP	1	Briggs & Stratton 675EX	126t026849h1a7080

RURIS IMPEX S.R.L.
Calea Severinului, bl. 317 b, parter
Craiova, Dolj
Tel.: 0351 46 46 32
Fax: 0351 46 46 33
Email: service@ruris.ro
www.ruris.ro