Documentatie tehnica motor 170F

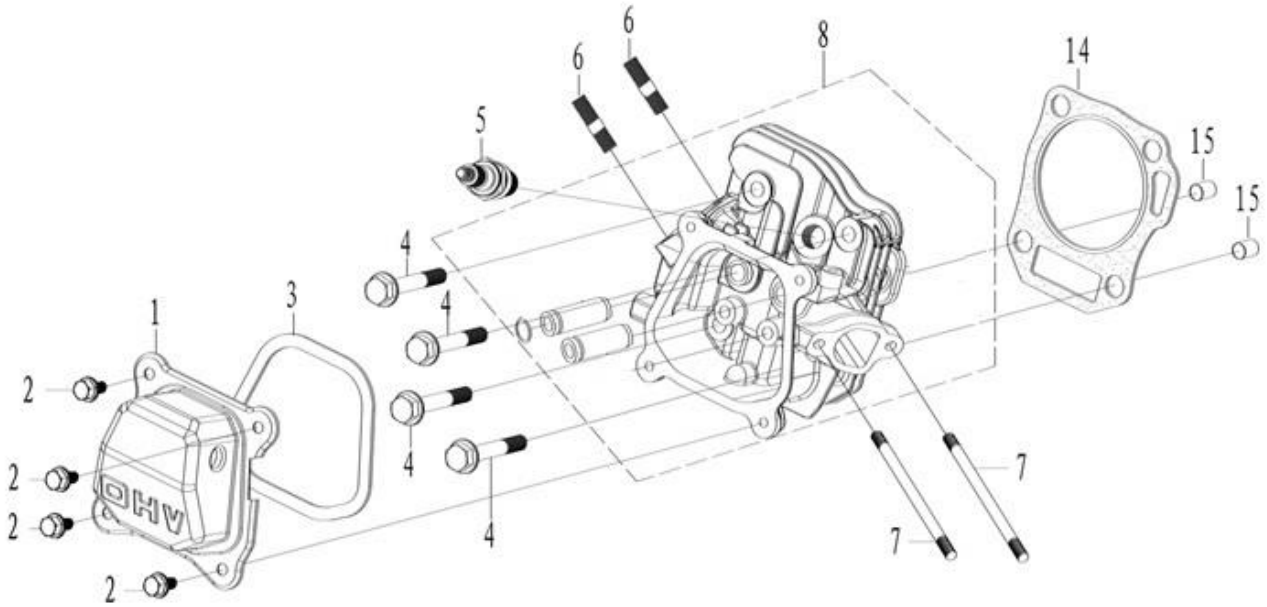

Nr.crt	Denumire produs	Product name	Cod comanda
1	Capac culbutori	Cover comp head	ps168f-1-1
2	Surub GB/T5789 M6×12	Screw GB/T5789 M6×12	ps168f-1-2
3	Garnitura capac	Cover gasket	ps168f-1-3
4	Surub GB/T5789 M8×60	Screw GB/T5789 M8×60	ps168f-1-4
5	Bujie	Plug spark	br4t
6	Prezon M8×35	Stud M8×35	ps168f-1-6
7	Prezon M6×110	Stud M6×110	ps168f-1-7
8	Chiuloasa	Head comp cylinder	ps170f-1-8
14	Garnitura chiuloasa	Cylinder head gasket	ps170f-1-14
15	Bolt ghidare ϕ10×16	Guid bolt	ps168f-1-15

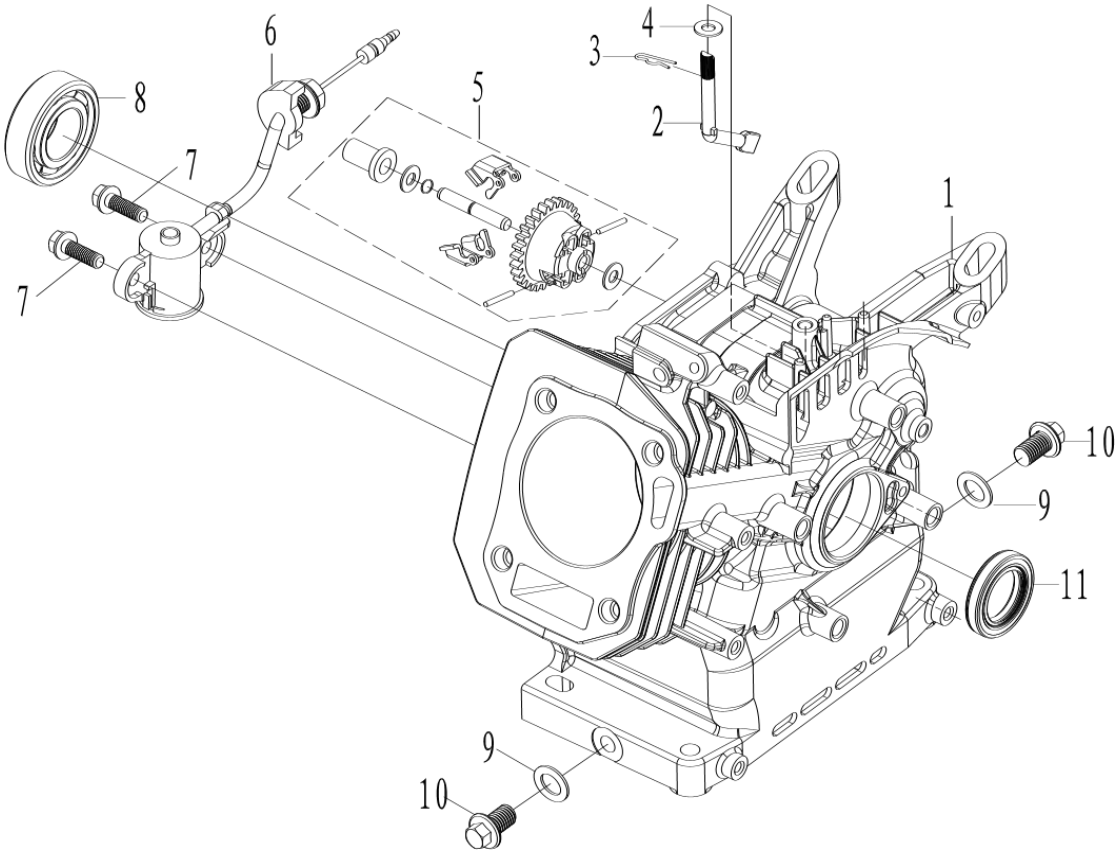

Nr.crt	Denumire produs	Product name	Cod comanda
1	Carter	Crankcase	ps170f-2-1
2	Brat regulator	Arm governor	ps168f-2-2
3	Siguranta	Pin	ps168f-2-3
4	Saiba plata ϕ6×ϕ13×1	Plate washer ϕ6×ϕ13×1	ps168f-2-4
5	Ansamblu regulator	Gear governor	ps168f-2-5
6	Senzor ulei	Oil sensor	ps168f-2-6
7	Surub M6×16	Screw M6×16	ps168f-2-7
8	Rulment 6205	Bearing 6205	ps168f-2-8
9	Saibaϕ10×ϕ16×1.5	Washer ϕ10×ϕ16×1.5	ps168f-2-9
10	Surub golire ulei M10×15	Oil drain screw M10X15	ps168f-2-10
11	Simeringϕ25×ϕ41.25×6	Oil seal ϕ25×ϕ41.25×6	ps168f-2-11

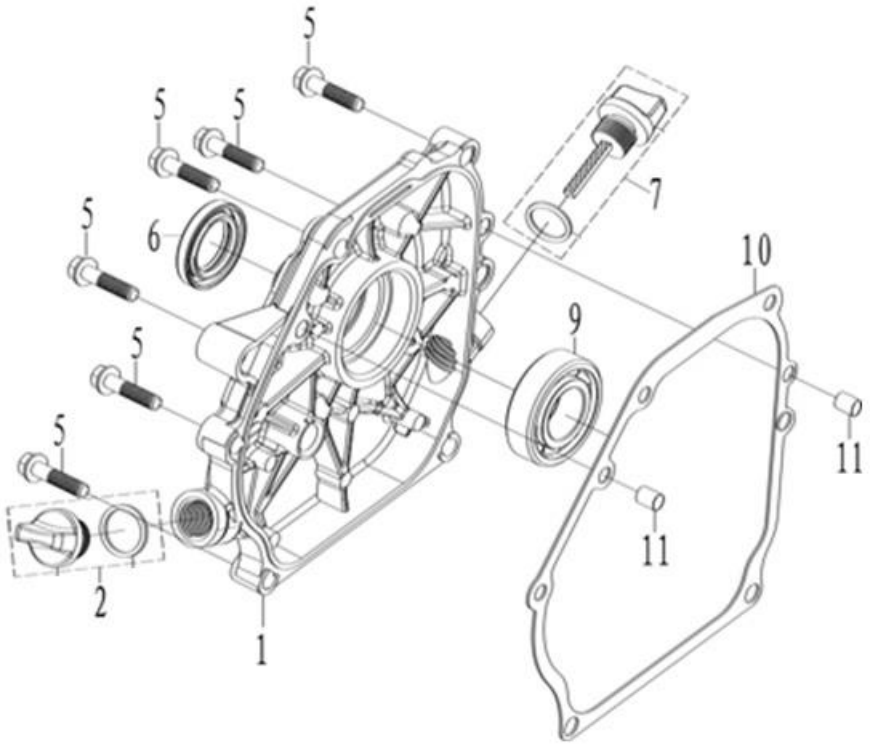

Nr.crt	Denumire produs	Product name	Cod comanda
1	Capac Carter	Crankcase cover	ps168f-3-1
2	Ansamblu buson ulei	Oil cap assy	ps168f-3-2
5	Surub M8×32	Screw M8×32	ps168f-3-5
6	Simering 25x41,25x6	Oil seal 25x41,25x6	ps168f-3-6
7	Ansamblu joja ulei	Oil dipstick assy	ps168f-3-7
9	Rulment GB/T276/6205	Bearing GB/T276/6205	ps168f-3-9
10	Garnitura carter	Crankcase gasket	ps168f-3-10
11	Bolt centrare ϕ8×14	Bolt ϕ8×14	ps168f-3-11

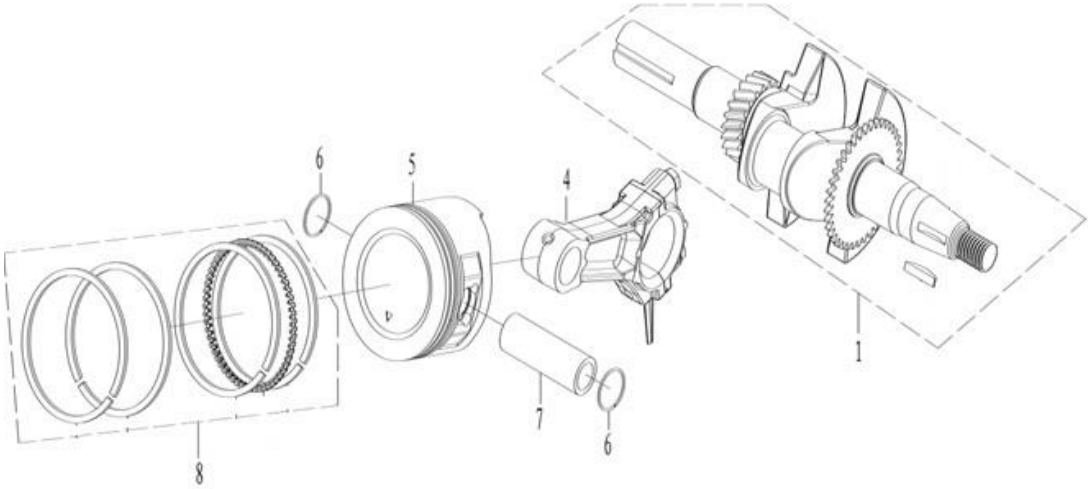

Nr.crt	Denumire produs	Product name	Cod comanda
1	Ansamblu ambielaj	Crankshaft assy	ps168f-4-1
1a	Arbore 7009	Crankshaft 7009	ps168f-4-1a
1b	Arbore 5800r	Crankshaft 5800r	ps168f-4-1b
4	Ansamblu biela	Rod assy	ps168f-4-4
5	Piston,Ø70, inaltime fusta 47mm	Piston,Ø70, height 47mm	ps170f-4-5
5a	Piston,Ø70, inaltime fusta 43mm	Piston,Ø70, height 43mm	ps170f-4-5a
6	Siguranta	Safety spring	ps168f-4-6
7	Bolt	Bolt	ps168f-4-7
8	Segmenti, Ø70, grosime 1,5mm	Piston ring, Ø70, thickness 1,5mm	ps170f-4-8
8a	Segmenti, Ø70, grosime 1mm	Piston ring, Ø70, thickness 1mm	ps170f-4-8a

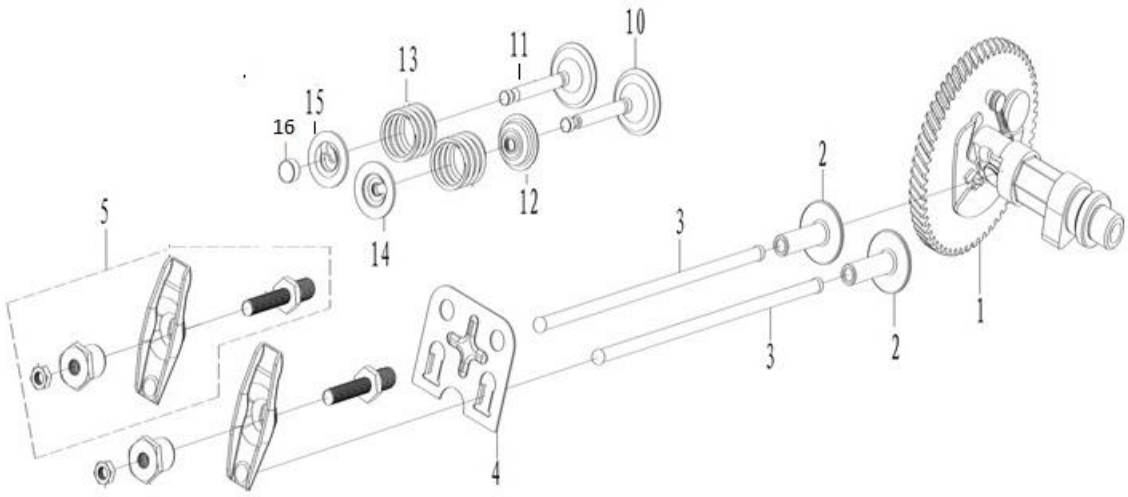

Nr.crt	Denumire produs	Product name	Cod comanda
1	Ansamblu ax came	Camshaft assy	ps168f-5-1
2	Tachet	Rocker	ps168f-5-2
3	Tija	Rod	ps168f-5-3
4	Placa ghidaj	Guide plate	ps168f-5-4
5	Ansamblu culbutori	Arm assy	ps168f-5-5
10	Supapa admisie	Intake valve	ps168f-5-10
11	Supapa evacuare	Exhaust valve	ps168f-5-11
12	Simering	Oil seal	ps168f-5-12
13	Arc supapa	Valve spring	ps168f-5-13
14	Taler admisie	Intake plate	ps168f-5-14
15	Taler evacuare	Exhaust plate	ps168f-5-15
16	Pastila	Pill	ps168f-5-16

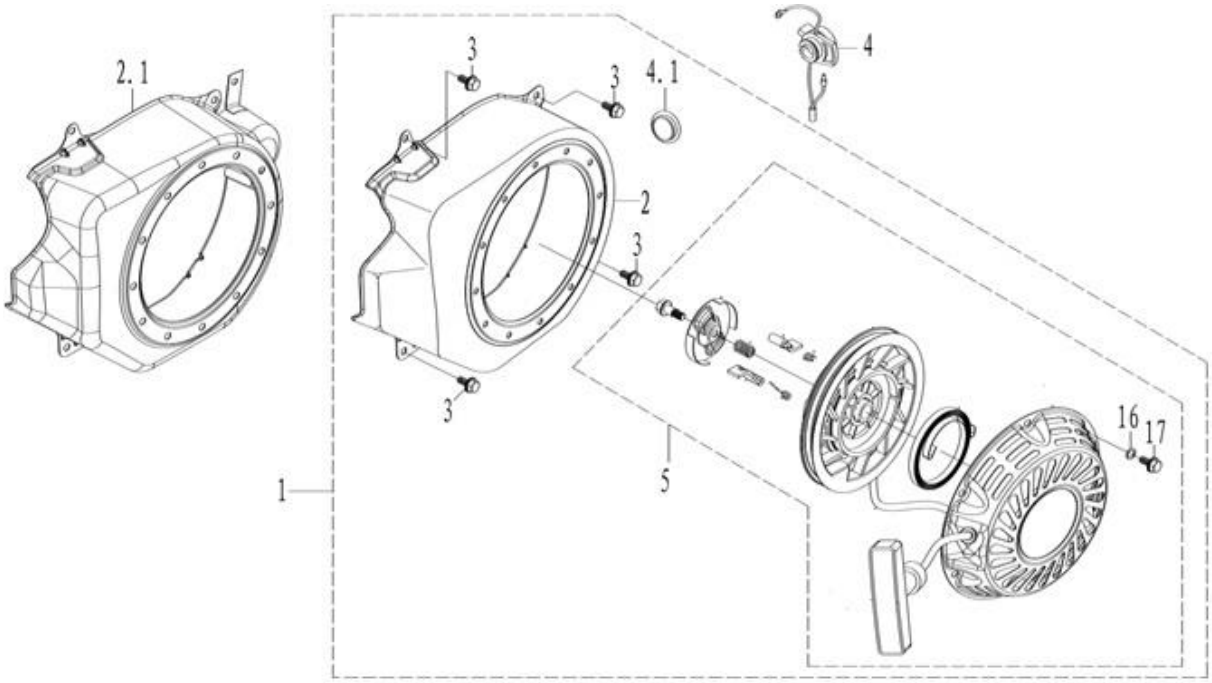

Nr.crt	Denumire produs	Product name	Cod comanda
1	Ansamblu demaror+deflector	Starter+ deflector assy	ps168f-6-1
3	Surub M6*12	Screw M6*12	ps168f-6-3
4	Comutator start-stop	Start- stop switch	ps168f-6-4
5	Demaror	Starter	ps168f-6-5
5a	Demaror 6500	Starter 6500	ps168f-6-5a
5b	Demaror 7009	Starter 7009	ps168f-6-5b
5c	Demaror forma D	Starter in D format	ps168f-6-5c
16	Saiba 6	Washer 6	ps168f-6-16
17	Surub M6×10	Screw M6×10	ps168f-6-17

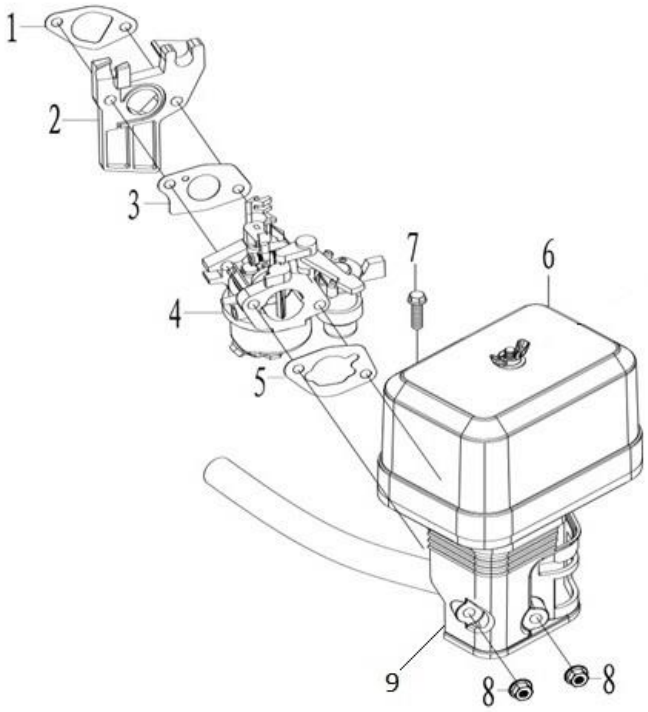

Nr.crt	Denumire produs	Product name	Cod comanda
1	Garnitura	Gasket	ps168f-7-1
2	Izolator	Insulator	ps168f-7-2
3	Garnitura	Gasket	ps168f-7-3
4	Carburator	Carburetor	ps168f-7-4
5	Garnitura	Gasket	ps168f-7-5
6	Ansamblu filtru aer	Air filter assy	ps168f-7-6
7	Surub M6*22	Screw M6*22	ps168f-7-7
8	Piulita	Nut	ps168f-7-8
9	Suport filtru aer	Air filter support	ps168f-7-9

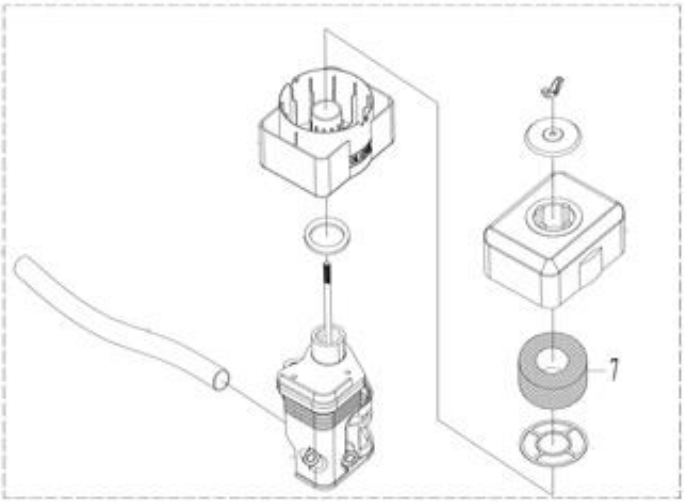

Nr.crt	Denumire produs	Product name	Cod comanda
7	Cartus filtrant	Filter cartridge	ps168f-8-7

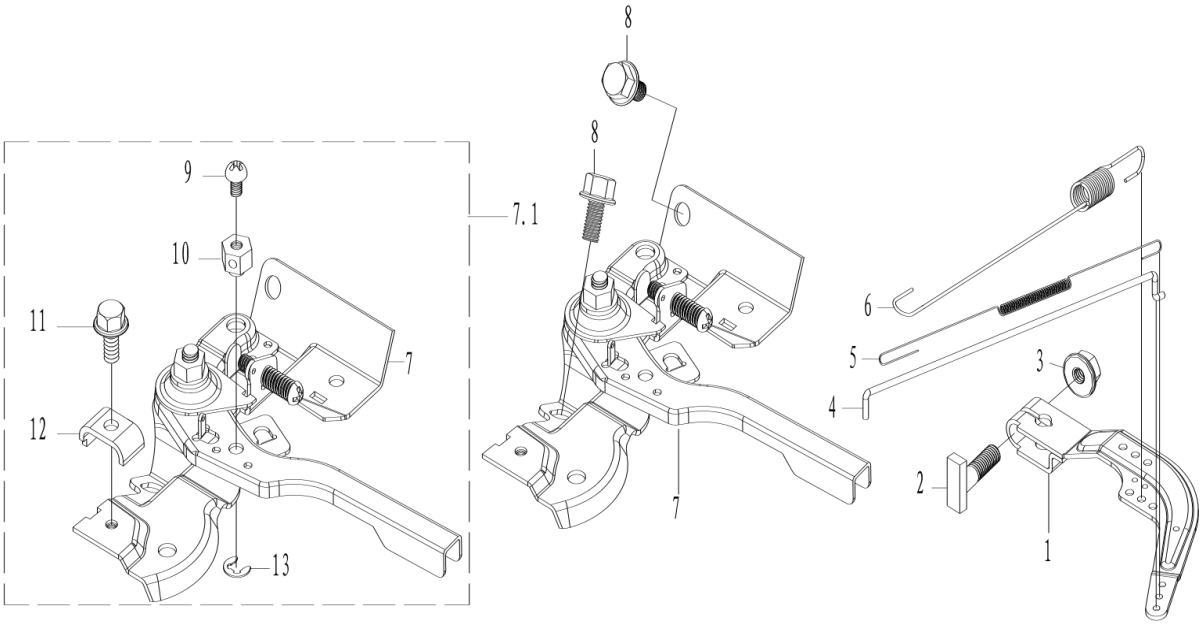

Nr.crt	Denumire produs	Product name	Cod comanda
1	Brat regulator	Arm governor	ps168f-9-1
2	Surub cap T	Head screw T	ps168f-9-2
3	Piulita M6	Nut M6	ps168f-9-3
4	Tija regulator	Governor rod	ps168f-9-4
5	Arc regulator	Governor spring	ps168f-9-5

6	Arc acceleratie	Acceleration spring	ps168f-9-6
7	Ansamblu acceleratie	Acceleration assy	ps168f-9-7
7a	Ansamblu acceleratie	Acceleration assy	ps168f-9-7a
8	Surub M6×12	Screw M6×12	ps168f-9-8
9	Surub M4×6	Screw M4×6	ps168f-9-9
13	Siguranta	Safety spring	ps168f-9-13

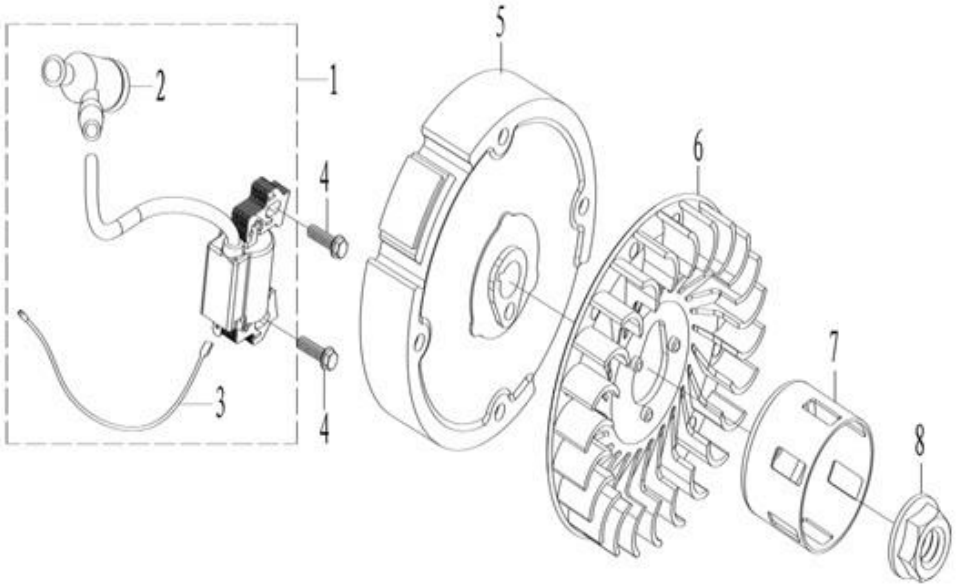

Nr.crt	Denumire produs	Product name	Cod comanda
1	Modul aprindere	Ignition module	ps168f-10-1
4	Surub M6×22	Screw M6×22	ps168f-10-4
5	Volanta	Flywheel	ps168f-10-5
6	Ventilator	Ventilator	ps168f-10-6
7	Antrenor	Trainer	ps168f-10-7
8	Piulita M14×1.5	Screw M14×1.5	ps168f-10-8

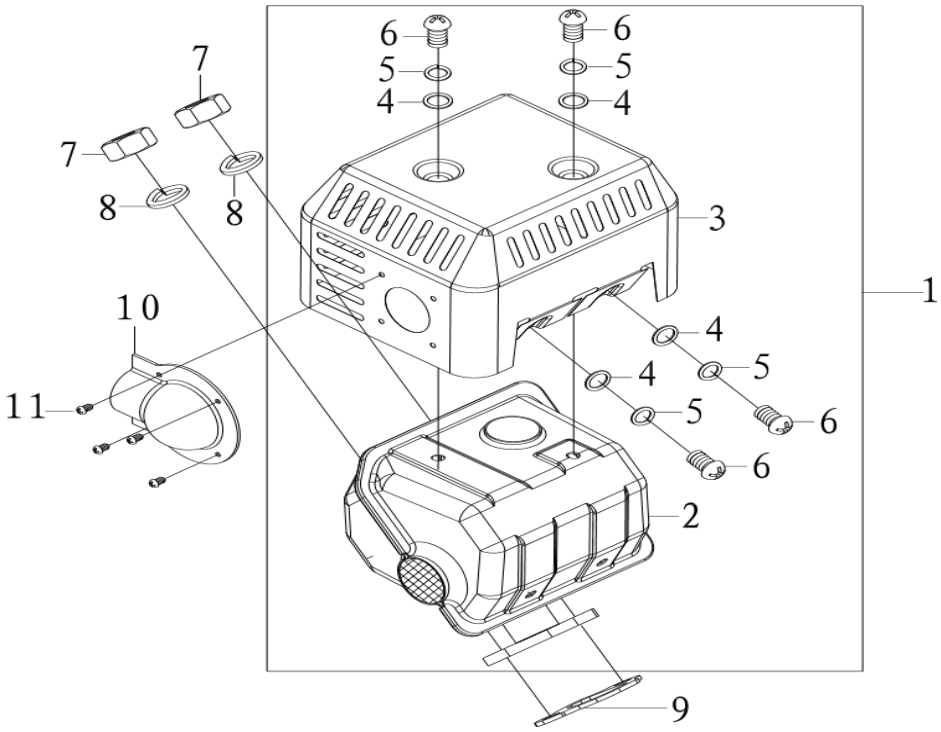

Nr.crt	Denumire produs	Product name	Cod comanda
1	Ansamblu toba esapament	Exhaust drum assy	ps168f-11-1
4	Saiba 5	Washer 5	ps168f-11-4
5	Saiba elastica 5	Elastic washer	ps168f-11-5
6	Surub M5×12	Screw M5×12	ps168f-11-6
7	Piulita M8	Nut M8	ps168f-11-7
8	Saiba elastica 8	Elastic washer 8	ps168f-11-8
9	Garnitura toba	Gasket drum	ps168f-11-9
11	Surub ST4.2×5	Screw ST4.2×5	ps168f-11-11

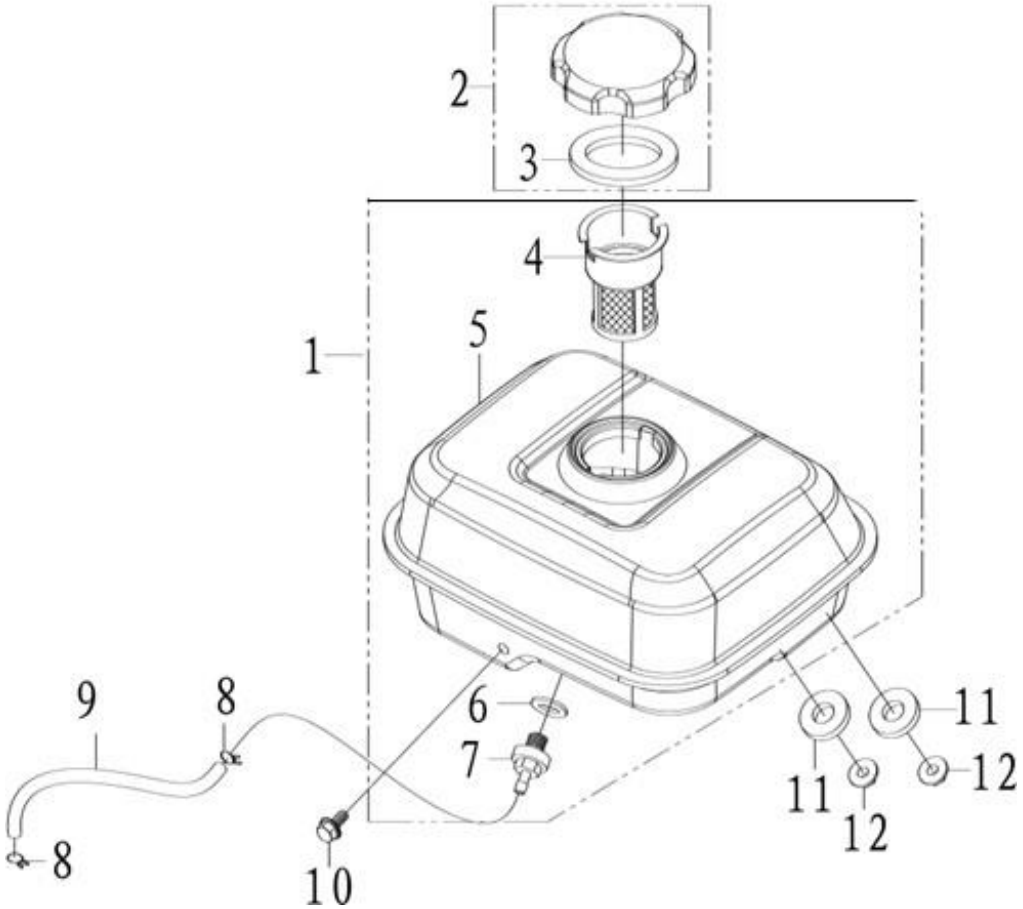

Nr.crt	Denumire produs	Product name	Cod comanda
1	Ansamblu rezervor	Tank assy	ps168f-12-1
2	buson rezervor	Tank cap	ps168f-12-2
8	Suguranta furtun	Safety hose	ps168f-12-8
9	Furtun	Hose	ps168f-12-9
10	Surub M6×25	Screw M6×25	ps168f-12-10
12	Piulita M6	Nut M6	ps168f-12-12

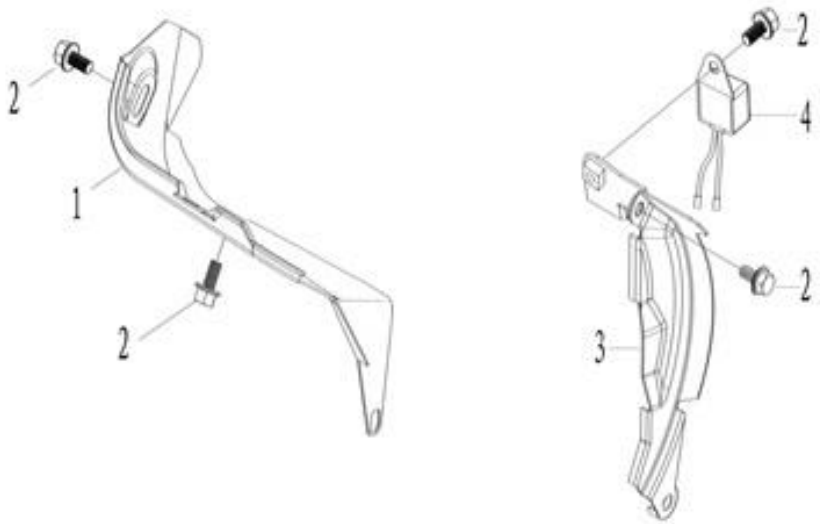

Nr.crt	Denumire produs	Product name	Cod comanda
1	Scut ventilatie	Ventilation shield	ps168f-13-1
2	Surub M6×12	Screw M6×12	ps168f-13-2
3	Placa	Plate	ps168f-13-3
4	Condensator	Condenser	ps168f-13-4