Documentatie tehnica motosapa Gigant 6048

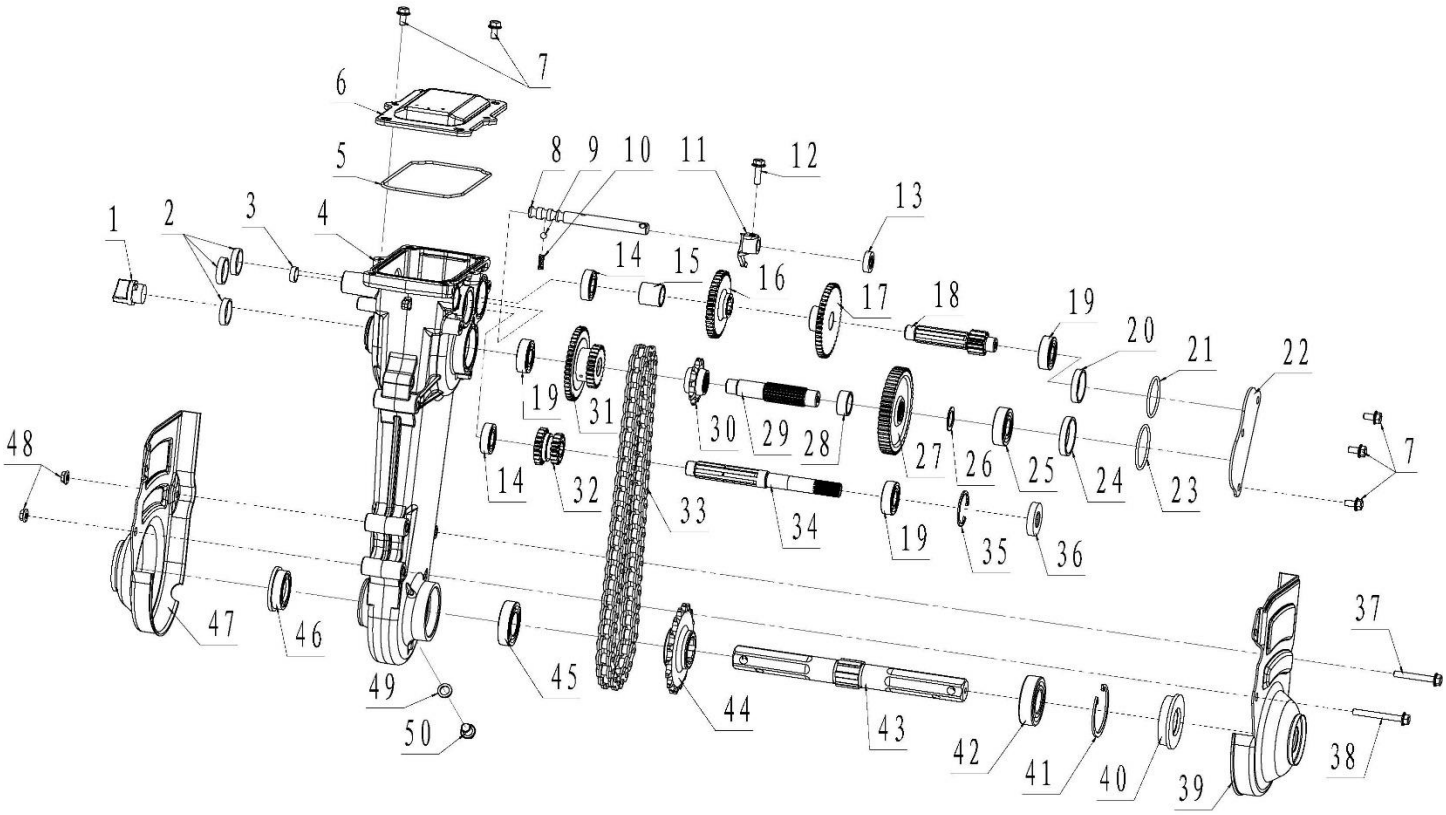

Nr.crt	Denumire produs	Product name	Cod comanda
1	dop ulei	oil hole plug	ps6500k-1-1
2	simering a	oil plug a	ps6500k-1-2
3	simering b	oil plug b	ps6500k-1-3
4	carcasa reductor	gear box	ps6500k-1-4
5	garnitura superioara	seal ring of top cover	ps6500k-1-5
6	capac cutie viteze	top cover comp of gear box	ps6500k-1-6
7	surub m6X12	bolt m6×12	ps6500k-1-7
8	ax indexor	shift fork shaft	ps6500k-1-8
9	bila de otel	steel ball Φ6.35	ps6500k-1-9
10	arc	sping	ps6500k-1-10
11	indexor	shift fork	ps6500k-1-11
12	surub m6x20	bolt m6×20	ps6500k-1-12
13	simering 12x22x6	oil seal 12×22×6	ps6500k-1-13
14	rulment 6002	bearing 6002	ps6500k-1-14
15	bucsa f1	bush f1	ps6500k-1-15
16	roata transmisie 2	the 2nd driven gear	ps6500k-1-16

17	roata transmisie 1	the 1st driven gear	ps6500k-1-17
18	ax canelat	counter shaft	ps6500k-1-18
19	rulment 6203	bearing 6203	ps6500k-1-19
20	bucsa c	bush c	ps6500k-1-20
21	oring 39x2.6	o-ring39×2.6	ps6500k-1-21
22	capac	oil stopper	ps6500k-1-22
23	oring 43.5x2.6	o-ring43.5×2.6	ps6500k-1-23
24	bucsa d	bush d	ps6500k-1-24
25	rulment 6203	bearing 6203	ps6500k-1-25
26	saiba	backup plate	ps6500k-1-26
27	roata dintata	driving gear	ps6500k-1-27
28	bucsa i	bush i	ps6500k-1-28
29	ax canelat	driving sprocket shaft	ps6500k-1-29
30	roata dintata	driving sprocket	ps6500k-1-30
31	roata mers inapoi	double toothed wheel	ps6500k-1-31
32	roata baladoare	double toothed wheel	ps6500k-1-32
33	lant	chain (50 joints)	ps6500k-1-33
34	ax principal	main shaft	ps6500k-1-34
35	zegher	circlip 35	ps6500k-1-35
36	simering 16x35x7	oil seal 16×35×7	ps6500k-1-36
37	surub m6x45	bolt m6×45	ps6500k-1-37
38	surub m6x55	bolt m6×55	ps6500k-1-38
39	capac reductor stanga	gear box left cover	ps6500k-1-39
40	simering	oil seal a	ps6500k-1-40
41	zegher	circlip 52	ps6500k-1-41
42	rulment 6205	bearing 6205	ps6500k-1-42
43	ax canelat	driven sprocket shaft	ps6500k-1-43
44	roata lant	driven sprocket	ps6500k-1-44
45	rulment 6005	bearing 6005	ps6500k-1-45
46	simering	oil seal b	ps6500k-1-46
47	capac reductor derapta	gear box right cover	ps6500k-1-47
48	piulita m6	nut m6	ps6500k-1-48
49	saiba 10x16x2	washer 10×16×2	ps6500k-1-49
50	surub m10x1.25.12	bolt m10×1.25×12	ps6500k-1-50

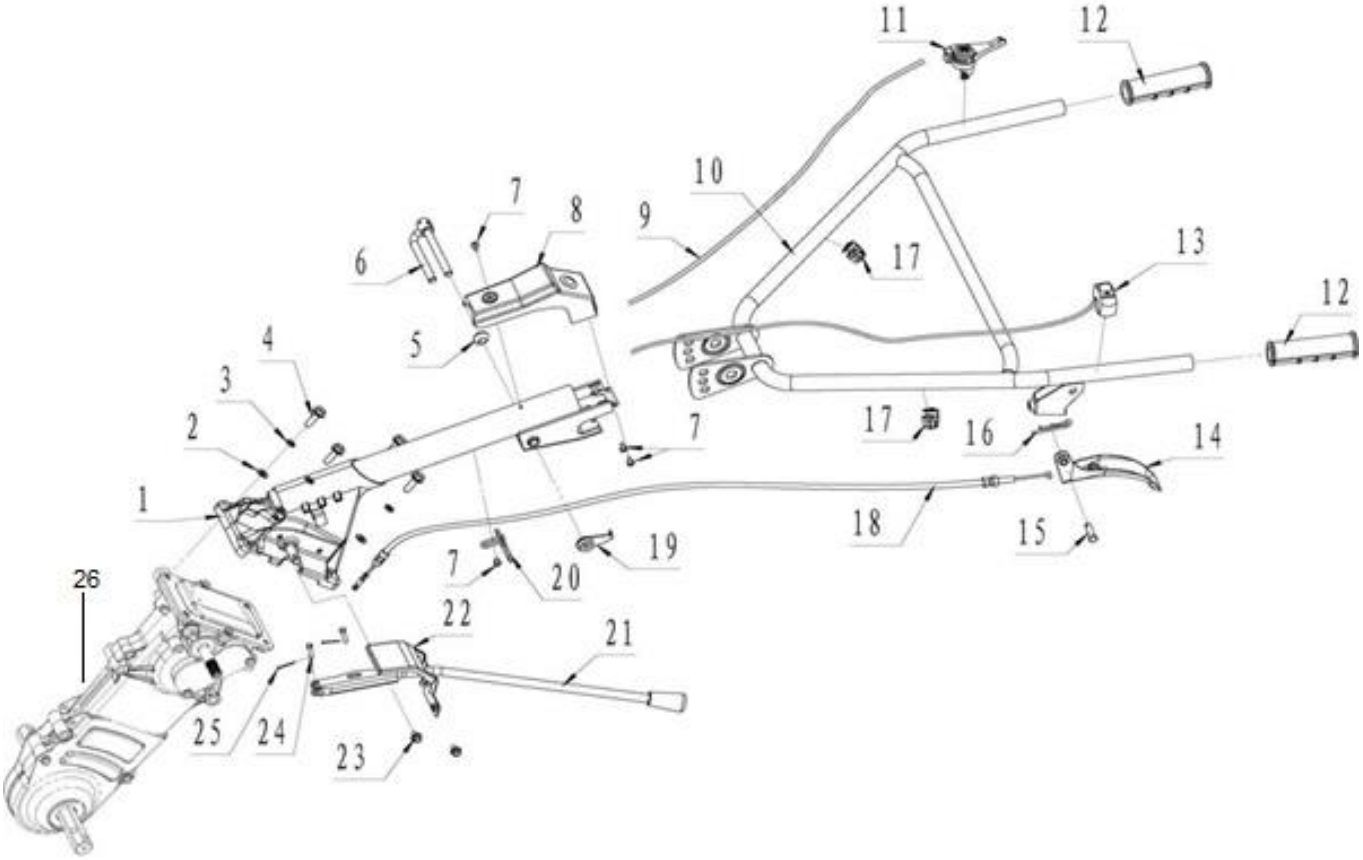

Nr. Crt	Denumire produs	Product name	Cod comanda
1	legatura suport	standing ipe jointing	ps6500k-2-1
2	saiba	flat washer 8	ps6500k-2-2
3	grower	spring washer 8	ps6500k-2-3
4	surub m8x25	bolt m8×25	ps6500k-2-4
5	bucsa	wimble bush	ps6500k-2-5
6	grup reglare coarne	handle adjuster comp	ps6500k-2-6
7	surub	screw st4.8×12	ps6500k-2-7
8	ornament	inlet cover	ps6500k-2-8
9	ansamblu cablu acceleratie	throttle cable comp	ps6500k-2-9
10	suport coarne	handle comp	ps6500k-2-10
11	maneta acceleratie	throttle handlebar	ps6500k-2-11
12	maner corn	grip	ps6500k-2-12
13	ansamblu motor-stop	shut down switch comp	ps6500k-2-13
14	maneta ambreiaj	clucth handle	ps6500k-2-14
15	agrafa 8x28	pin 8×28	ps6500k-2-15
16	agrafa f	clip f	ps6500k-2-16

17	clema	clipϕ22	ps6500k-2-17
18	cablu ambreiaj	clucth cable	ps6500k-2-18
19	suport	stand comp	ps6500k-2-19
20	bucla	loop	ps6500k-2-20
21	maneta schimbator	shift lever	ps6500k-2-21
22	suport maneta schimbator	gear position indication stan	ps6500k-2-22
23	surub m6x10	bolt m6×10	ps6500k-2-23
24	bolt	pin sx 25	ps6500k-2-24
25	agrafa 1.5x20	clip1.5x20	ps6500k-2-25
26	ansamblu reductor	gear box assy	ps6500k-2-26

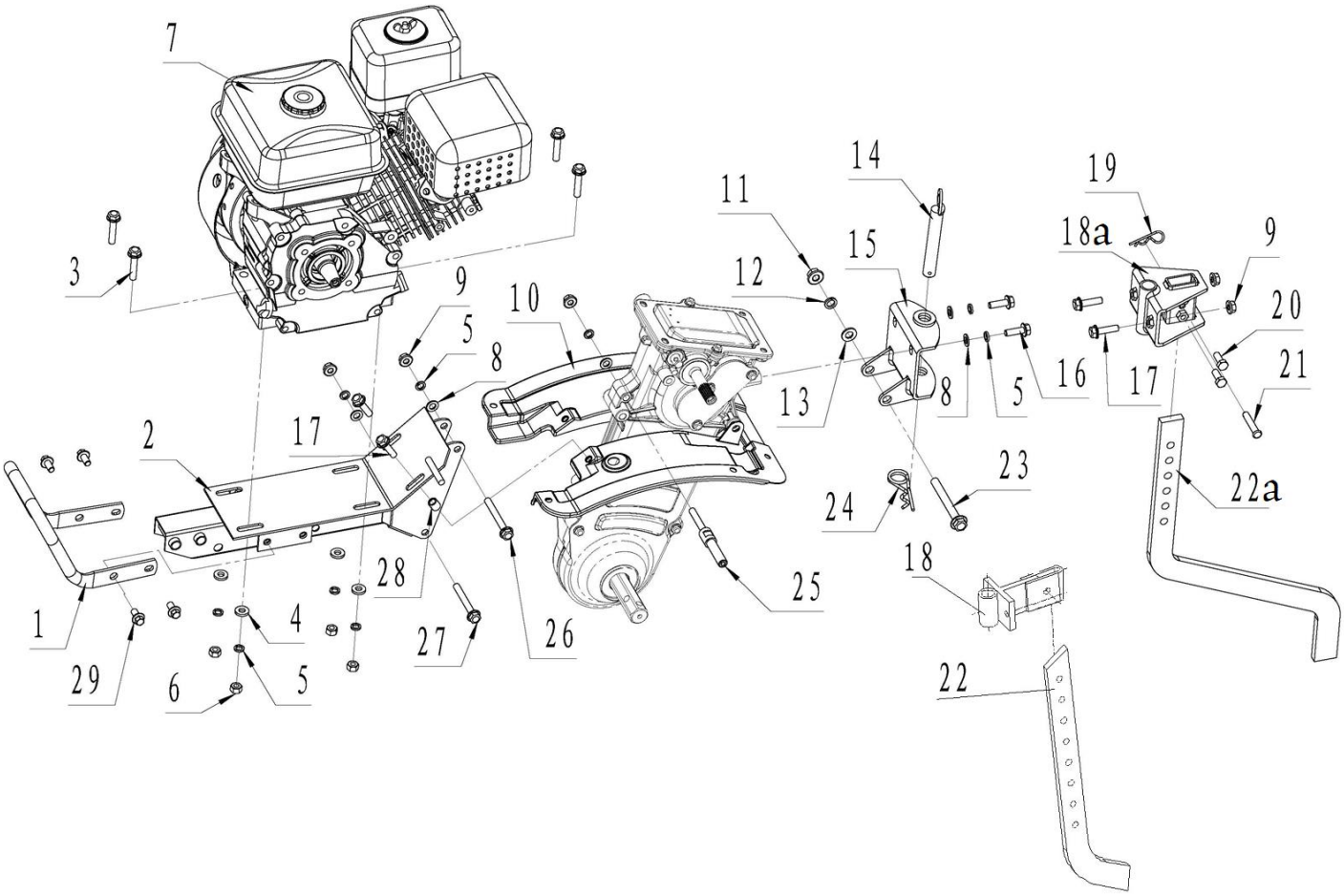

Nr.crt	Denumire produs	Product name	Cod comanda
1	bara de protectie	handrail	ps6500k-3-1
2	suport motor	engine bearer	ps6500k-3-2

3	surub m8x40	bolt m8×40	ps6500k-3-3
4	saiba 8x28x3	flat washer 8×18×3	ps6500k-3-4
5	grover 8	spring washer 8	ps6500k-3-5
6	piulita m8	Nut M8	ps6500k-3-6
7	motor arbore cilindric 168f	gasoline engine 168f (cylindrical crankshaft)	ps6500k-3-7
7a	motor arbore caneluri 170f	gasoline engine 170f (grooves crankshaft)	ps6500k-3-7a
7b	motor arbore conic 170f	gasoline engine 170f (conical crankshaft))	ps6500k-3-7b
8	saiba 8x28x3	flat washer 8	ps6500k-3-8
9	piulita m8	nut m8	ps6500k-3-9
10	aripi intrioare	inner fender	ps6500k-3-10
11	piulita m10	nut m10	ps6500k-3-11
12	grover 10	spring washer 10	ps6500k-3-12
13	saiba 8x28x3	flat washer 10	ps6500k-3-13
14	bolt	pin spindle	ps6500k-3-14
15	support accesori	hinge frame combination	ps6500k-3-15
16	surub m8x25	bolt m8×25	ps6500k-3-16
17	surub m8x30	bolt m8×30	ps6500k-3-17
18	suport picior	ratory blade connecting set	ps6500k-3-18
18a	suport picior	ratory blade connecting set	ps6500k-3-18a
19	arc b	garter spring b	ps6500k-3-19
20	surub m8x20	bolt m8×20	ps6500k-3-20
21	bolt 8x43	pin spindle 8×43	ps6500k-3-21
22	picior suport	eep furrowing resistance par	ps6500k-3-22
22a	picior suport	eep furrowing resistance par	ps6500k-3-22a
23	surub m8x25	bolt m10×90	ps6500k-3-23
24	siguranta	garter spring c	ps6500k-3-24
25	suport	oning wheel supporting	ps6500k-3-25
26	surub m8x25	bolt msx 70	ps6500k-3-26
27	surub m8x25	bolt msx 65	ps6500k-3-27
28	bucsa	bush 8X12X12	ps6500k-3-28
29	surub m8x25	bolt msx 16	ps6500k-3-29

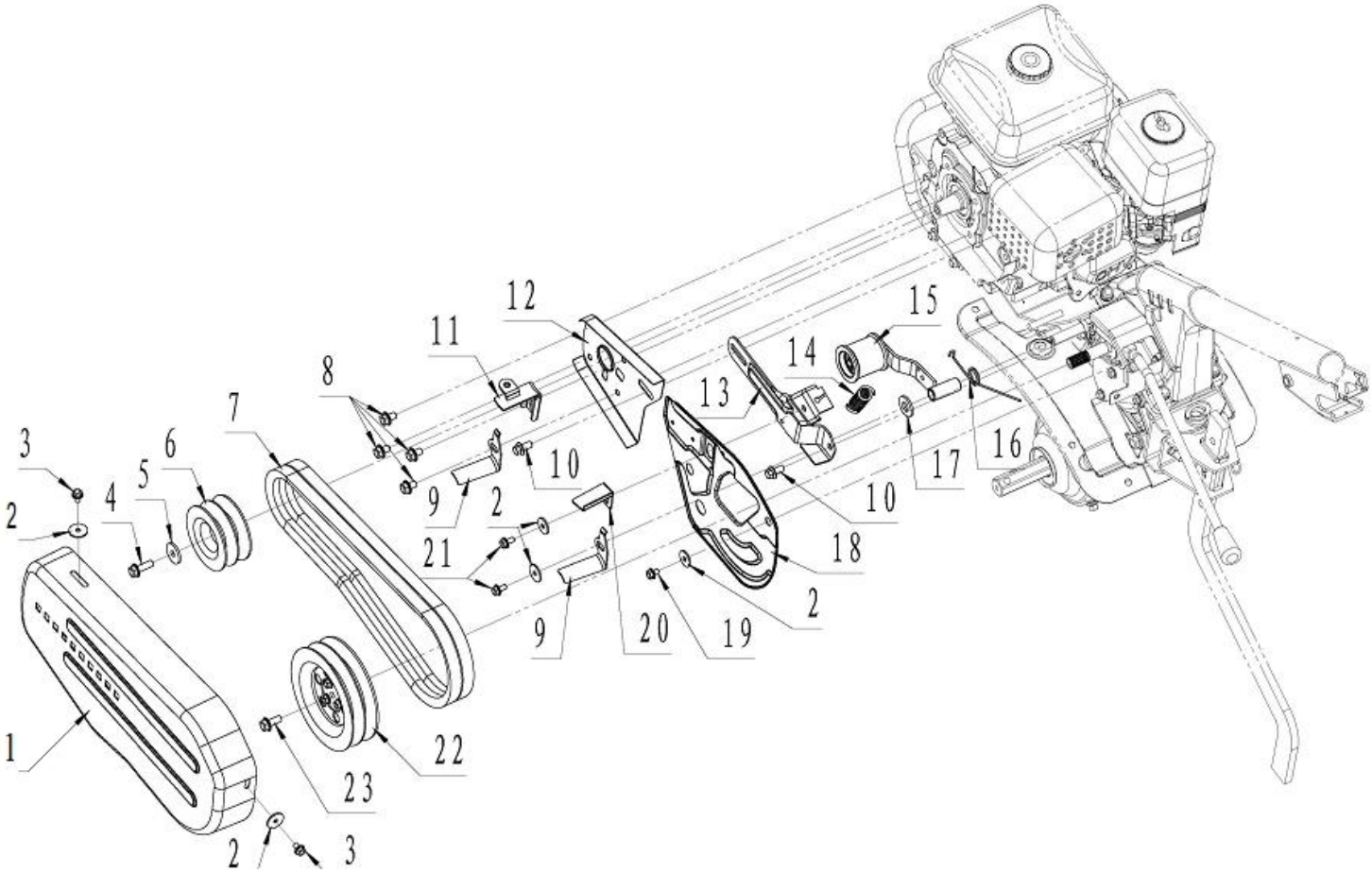

Nr. crt	Denumire produs	Product name	Cod comanda
1	capac curea	belt protector	ps6500k-4-1
2	saiba 8x28x3	washer 6×22×2	ps6500k-4-2
3	surub m6x10	bolt m6×10	ps6500k-4-3
4	surub m8x25	bolt m8×25	ps6500k-4-4
5	saiba 8x28x3	washer 8×28×3	ps6500k-4-5
6	Fulie conica	pulley conical	ps6500k-4-6
6a	Fulie cilindrica	cylindrical pulley	ps6500k-4-6a
6b	Fulie cu caneluri	pulley with grooves	ps6500k-4-6b
7	curea (17X914Li)(for 6500k)	v-belt (17X914Li)(for 6500k)	ps6500k-4-7
7a	curea (1370) (for 6000k)	v-belt (1370) (for 6000k)	ps6500k-4-7a
7b	curea (17x864Li) (for 7099)	v-belt (17x864Li) (for 7099)	ps6500k-4-7b
7c	curea (13X1010) (for 7600K)	v-belt (13X1010) (for 7600K)	ps6500k-4-7c
8	surub m8x25	bolt m8×12	ps6500k-4-8
9	limitator curea	v-belt guard c	ps6500k-4-9
10	surub m8x25	bolt m8×16	ps6500k-4-10
11	limitator curea	v-belt guard b	ps6500k-4-11
12	aparatoare curea	driving pulley plate	ps6500k-4-12

13	placa de conectare	connecting plate	ps6500k-4-13
14	arc intinzator	tensioner spring	ps6500k-4-14
15	intinzator	tensioner jointing	ps6500k-4-15
16	prindere intinzator	torsion–bar spring	ps6500k-4-16
17	saiba	washer	ps6500k-4-17
18	placa	passivity pulley plate	ps6500k-4-18
19	surub m6x10	bolt m6×10	ps6500k-4-19
20	limitator curea	v-belt guard a	ps6500k-4-20
21	surub m6x12	bolt m6×12	ps6500k-4-21
22	fulie mare	drive pulley comp	ps6500k-4-22
23	bolt m6x20	bolt m6×20	ps6500k-4-23

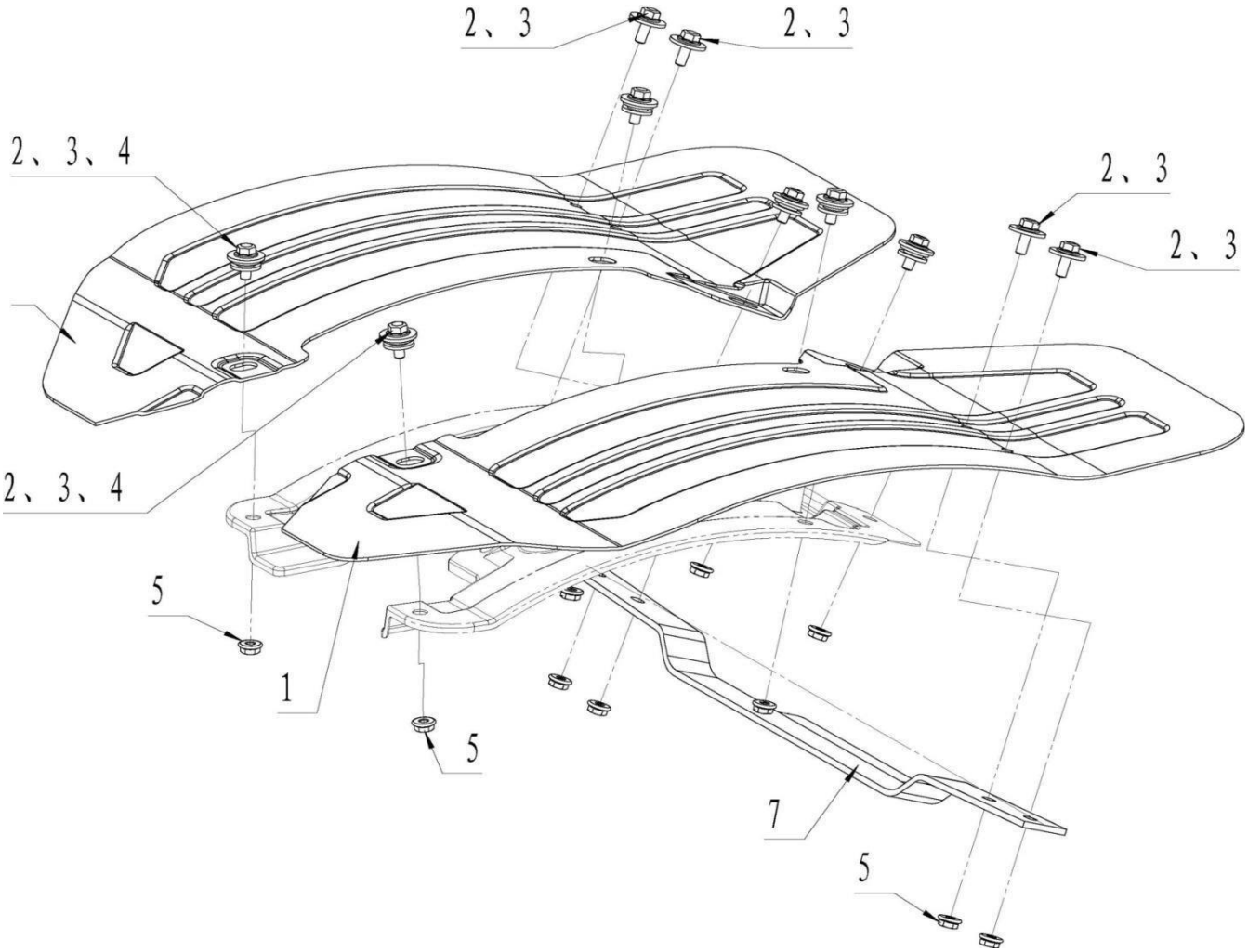

Nr.crt	Denumire produs	Product name	Cod comanda
1	aripa st	feft fender	ps6500k-5-1
2	surub m8x25	bolt m6×16	ps6500k-5-2

3	saiba	washer 6×22×2	ps6500k-5-3
4	manson	rubber sleeve	ps6500k-5-4
5	piulita 6	nut m6	ps6500k-5-5
6	aripa dr	right fender	ps6500k-5-6
7	suport aripa	connecting plate	ps6500k-5-7

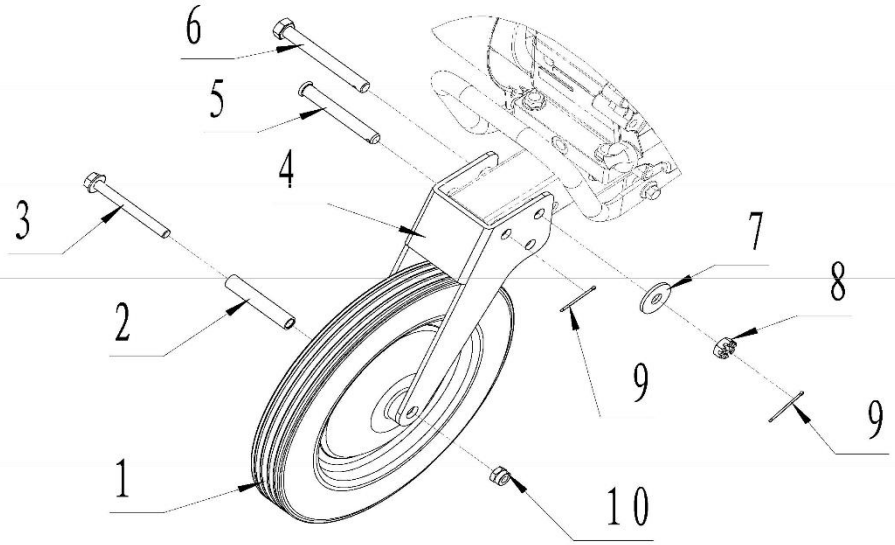

Nr. Crt	Denumire produs	Product name	Cod comanda
1	ansamblu roata fata	front wheel	ps6500k-6-1
3	surub m8x75	bolt m8×75	ps6500k-6-3
4	suport roata	front wheel stand	ps6500k-6-4
5	bolt 10x75	pin 10×75	ps6500k-6-5
6	surub m8x75	bolt M8×85	ps6500k-6-6
7	saiba 10	washer 10	ps6500k-6-7
8	piulita m10	nut m10	ps6500k-6-8
9	siguranta	cotter pin2×30	ps6500k-6-9
10	piulita m8	nut m8	ps6500k-6-10

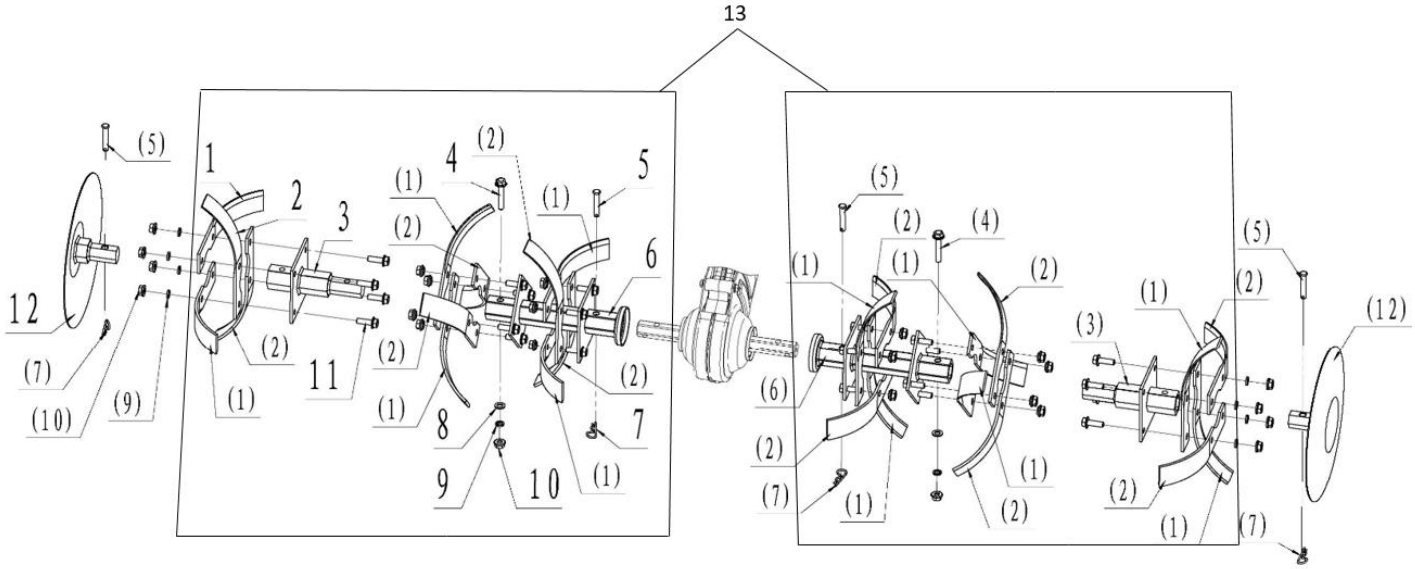

Nr. crt	Denumire produs	Product name	Cod comanda
1	cutit stanga 70mm	left rotary blade70mm	ps6500k-7-1
1a	cutit stanga 60mm	left rotary blade 60mm	ps6500k-7-1a
2	cutit dreapta 70mm	right rotary blade 70mm	ps6500k-7-2
2a	cutit dreapta 60mm	right rotary blade 60mm	ps6500k-7-2a
3	manicot fara guler	ubsiduary blade holder com	ps6500k-7-3
4	surub M8x30	screw M8×30	ps6500k-7-4
5	surub M8x45	screw M8×45	ps6500k-7-5
6	manicot cu guler	primary blade holder comp	ps6500k-7-6
7	arc de tensionare b	garter spring b	ps6500k-7-7
8	saiba 8	flat washer 8	ps6500k-7-8
9	grower 8	spring washer 8	ps6500k-7-9
10	piulita m8	nut m8	ps6500k-7-10
11	surub m8x25	bolt m8×25	ps6500k-7-11
12	taler	circinal cover	ps6500k-7-12
13	ansamblu freze ts	knife assembly	ps6500k-7-13

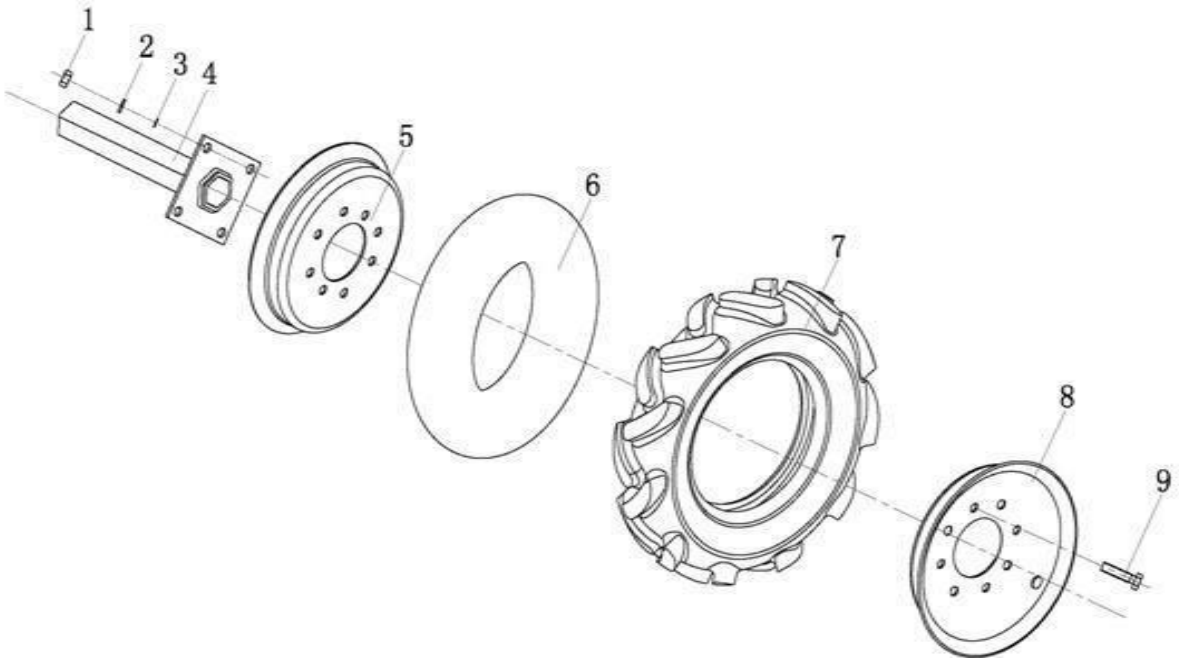

Nr. crt	Denumire produs	Product name	Cod comanda
1	piulita m10	nut m10	ps6500k-8-1
2	grover 10	spring washer 10	ps6500k-8-2
3	saiba 10	washer 10	ps6500k-8-3
4	manicot	wheel axle	ps6500k-8-4
5/8	janta	spoke	ps6500k-8-5
6	camera	inner tube	ps6500k-8-6
7	anvelopa	outer rubber tyre	ps6500k-8-7
9	surub	bolt	ps6500k-8-9

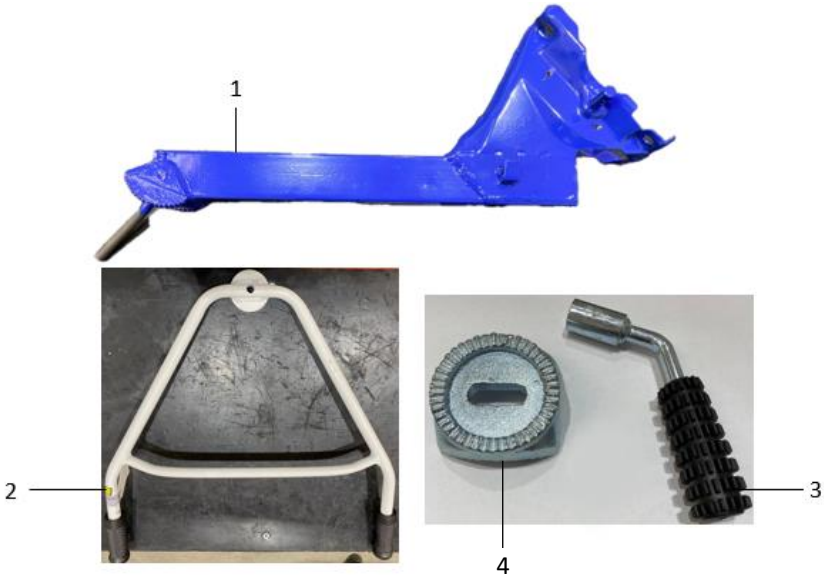

Nr. Crt	Denumire produs	Product name	Cod comanda
1	suport coarne	handle support	ps6048.2022-9-1
2	coarne	handle	ps6048.2022-9-2
3	sistem prindere coarne	handle clamping system	ps6048.2022-9-3
4	saiba canelata	washer	ps6048.2022-9-3