Producător motoutilaje

Documentatie tehnică

Documentatie tehnica pompa submersibila Aqua 1090

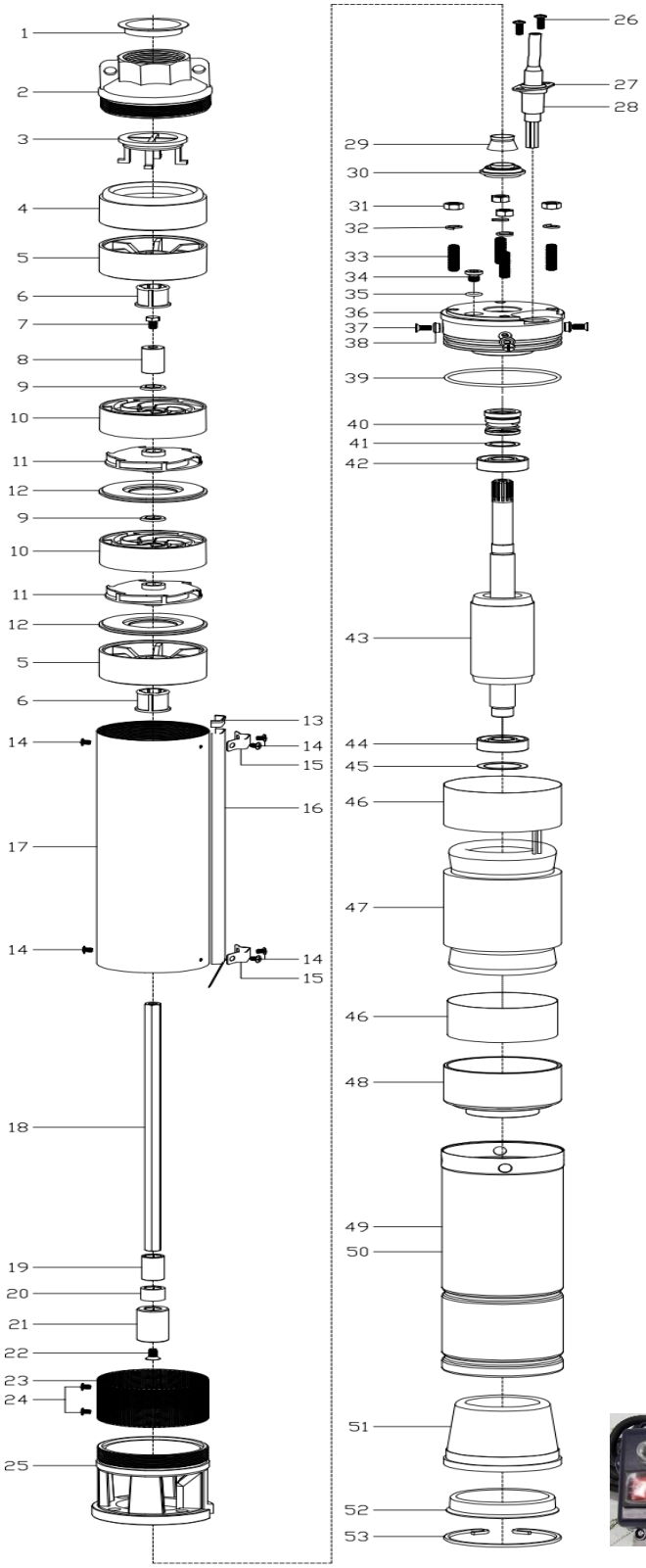

Craiova, ROMÂNIA

Nr.crt	Denumire produs	Product name	Cod comanda
1	protectie	Plastic cover	psaq890-1-1
2	cap refulare	Outlet	psaq890-1-2
3	capac supapa	Valve cover	psaq890-1-3
4	supapa	Valve	psaq890-1-4
5	suport supapa	Valve seat	psaq890-1-5
6	bucsa de ghidare	Guide bush	psaq890-1-6
7	surub	Screw	psaq890-1-7
8	rulment	Bearing bush(upper)	psaq890-1-8
9	garnitura etansare	Sealing gasket	psaq890-1-9
10	difuzor	Diffuser	psaq890-1-10
11	turbina	Impeller	psaq890-1-11
12	capac difuzor	Diffuser cover	psaq890-1-12
13	protectie cablu	Cable shield	psaq890-1-13
14	surub	Screw	psaq890-1-14
15	suport teava	Holder pipe	psaq890-1-15
16	capac cablu	Cable cover	psaq890-1-16
17	conducta pompa	Pump pipe	psaq1090-1-17
18	arbore	Impeller shaft	psaq1090-1-18
19	rulment	Bearing bush(down)	psaq890-1-19
20	rulment plastic	Plastic bearing bush	psaq890-1-20
21	cuplaj	Coupling	psaq890-1-21
22	surub	Screw	psaq890-1-22
23	filtru	Strainer	psaq890-1-23
24	surub	Screw	psaq890-1-24
25	cap refulare	Suction support	psaq890-1-25
26	surub	Screw	psaq890-1-26
27	protectie cablu	Cable cover-2	psaq890-1-27
28	cablu	Cable	psaq890-1-28
29	manson	Sand proof sleeve	psaq890-1-29
30	sita nisip	Sand proof cup	psaq890-1-30
31	piulita	Nut	psaq890-1-31
32	saiba	Washer	psaq890-1-32
33	prezon	Stud	psaq890-1-33
34	surub	Screw	psaq890-1-34
35	O-ring	"O"ring	psaq890-1-35
36	cilindru ulei	Oil cylinder	psaq890-1-36
37	surub	Screw	psaq890-1-37
38	grover	Locking ring	psaq890-1-38
39	O-ring	"O"ring	psaq890-1-39

40	etansare mecanica	Mechanical seal	psaq890-1-40
41	etansare mecanica	Mechanical seal adjustment washer	psaq890-1-41
42	rulment	Bearing(upper)	psaq890-1-42
43	rotor	Rotor	psaq1090-1-43
44	rulment	Bearing(down)	psaq890-1-44
45	rulment	Bearing adjustment washer	psaq890-1-45
46	izolatie	Insulation paper	psaq890-1-46
47	stator	copper coil	psaq1090-1-47
48	rulment carcasa inferioara	Bearing seat	psaq890-1-48
49	carcasa motor	Motor pipe	psaq1090-1-49
50	motor	motor oil	psaq1090-1-50
51	burduf	Rubber cup	psaq890-1-51
52	capac inferior	End cover	psaq890-1-52
53	inel siguranta	Clamping spring	psaq890-1-53
54	panou control	control panel	psaq890-1-54